KABA®

Kaba Access Control Electronic Products Catalog

Effective November 2010

E-PLEX®

Electronic Access Control PIN-Based Products

		2000	3000	3200	5000 / 5070	5200 / 5270
Credentials	PIN Access	✔	✔	✔	✔	✔
	Dual Credential Access					
	125 kHz Prox Card					
	13.56 mHz Smart Card					
	FIPs 201 (PIV, FRAC, TWIC, CAC)					
Access Codes	100 Users per Door	✔			✔	
	300 Users per Door		✔		*	*
	3,000 Users per Door			✔		✔
Locking Devices	Cylindrical Latch	✔			✔	✔
	Mortise (ASM)	✔			✔	✔
	Exit Trim	✔	✔	✔	✔	✔
	AR Latch/Deadbolt (not included)		✔	✔		
	Access Controller#				✔	✔
Power Source	PowerStar™ Available (no batteries)	✔				
	Batteries or External Power Source		✔	✔	✔	✔
Mechanical Features	No Wire Installation	✔	✔	✔	✔	✔
	Mechanical Key Override	✔	✔	✔	✔	✔
	Interchangeable Core (Best)	✔	✔	✔	✔	✔
	Removable Core (Large Format)				✔	✔
	Removable Mortise Cylinder		✔	✔		
	Key-in-Lever	✔			✔	✔
	Non-handed	✔	✔	✔	✔	✔
	Indoor/Outdoor (Approved)	✔	✔	✔	✔	✔
	Latch Holdback		✔	✔		
	Various Finishes Available	✔	✔	✔	✔	✔
Lock Set-up	Via Lock Keypad	✔	✔		✔	
	Via Software (Optional)		✔		✔	
	Via Software (Required)			✔		✔
	Upgradeable to Wireless Network			✔		✔
Programming Features	LearnLok™ (Enroll Cards at Lock)					
	Access Schedules*			✔		✔
	Vacation/Holiday Blocks*			✔		✔
	Programmable User Levels	✔	✔	✔	✔	✔
	Programmable Service Codes	✔	✔	✔	✔	✔
	Programmable Passage Re-Lock	✔	✔	✔	✔	✔
	First Manager–In Passage*			✔		✔
	Passage Mode	✔	✔	✔	✔	✔
	Lockout Mode	✔	✔	✔	✔	✔
Audit	9,000 Event Audit Trail*		✔		✔	
	30,000 Event Audit Trail*			✔		✔
Warranty Certification	BHMA Grade 1 Certified		+	+	✔	✔
	Three-hour UL/ULC Fire Rating	✔	N/A	N/A	✔	✔
	ADA Compliant	✔	✔	✔	✔	✔
	3-Year Warranty	†	✔	✔	✔	✔
	Built-in Warranty Counter	✔	✔	✔	✔	✔
	GSA FIPS Approved Product List					

For Additional Information, Please Turn to Inside Back Cover

E-PLEX®

Electronic Access Control Card-Based Products

		3600	3700	5600 5670	5700 5770	5800 5870
		Smart Cards	PROX BY HID	Smart Cards	PROX BY HID	GSA
Credentials	PIN Access	✔	✔	✔	✔	✔
	Dual Credential Access	✔	✔	✔	✔	✔
	125 kHz Prox Card		✔		✔	
	13.56 mHz Smart Card	✔		✔		
	FIPs 201 (PIV, FRAC, TWIC, CAC)					✔
Access Codes	100 Users per Door					
	300 Users per Door	✔	✔	✔	✔	✔
	3,000 Users per Door	*	*	*	*	*
Locking Devices	Cylindrical Latch			✔	✔	✔
	Mortise (ASM)			✔	✔	✔
	Exit Trim	✔	✔	✔	✔	✔
	AR Latch/Deadbolt (not included)	✔	✔			
	Access Controller#			✔	✔	✔
Power Source	PowerStar™ Available (no batteries)					
	Batteries or External Power Source			✔	✔	✔
Mechanical Features	No Wire Installation	✔	✔	✔	✔	✔
	Mechanical Key Override	✔	✔	✔	✔	✔
	Interchangeable Core (Best)	✔	✔	✔	✔	✔
	Removable Core (Large Format)			✔	✔	✔
	Removable Mortise Cylinder	✔	✔			
	Key-in-Lever			✔	✔	✔
	Non-handed	✔	✔	✔	✔	✔
	Indoor/Outdoor (Approved)	✔	✔	✔	✔	✔
	Latch Holdback	✔	✔			
	Various Finishes Available	✔	✔	✔	✔	✔
Lock Set-up	Via Lock Keypad	✔	✔	✔	✔	✔
	Via Software (Optional)	✔	✔	✔	✔	✔
	Via Software (Required)					
	Upgradeable to Wireless Network	✔	✔	✔	✔	
Programming Features	LearnLok™ (Enroll Cards at Lock)	✔	✔	✔	✔	✔
	Access Schedules*	✔	✔	✔	✔	✔
	Vacation/Holiday Blocks*	✔	✔	✔	✔	✔
	Programmable User Levels	✔	✔	✔	✔	✔
	Programmable Service Codes	✔	✔	✔	✔	✔
	Programmable Passage Re-Lock	✔	✔	✔	✔	✔
	First Manager–In Passage*	✔	✔	✔	✔	✔
	Passage Mode	✔	✔	✔	✔	✔
	Lockout Mode	✔	✔	✔	✔	✔
Audit	9,000 Event Audit Trail*					
	30,000 Event Audit Trail*	✔	✔	✔	✔	✔
Warranty Certification	BHMA Grade 1 Certified	+	+	✔	✔	✔
	Three-hour UL/ULC Fire Rating	N/A	N/A	✔	✔	✔
	ADA Compliant	✔	✔	✔	✔	✔
	3-Year Warranty	✔	✔	✔	✔	✔
	Built-in Warranty Counter	✔	✔	✔	✔	✔
	GSA FIPS Approved Product List					✔

* This feature requires software

\# Designed to work with mag locks, electric strikes, and other electronic locking devices driven by an external power supply (not included)

\+ BHMA certification standard not available for this category. Product fully tested to meet all rigid life cycle test and operating reliability per BHMA Grade 1 requirements

† 2 Year Warranty

No Wires! No Batteries!

Environmentally Friendly

- Provides Lower Cost of Ownership and Helps the Environment
- No Wires to Install or Get Pinched
- No Batteries to Replace
- Environmentally Friendly
- PowerStar™ Patented Technology Powers the Lock with Each Turn of the Lever

Introducing the E-Plex® 2000 with POWERSTAR™

Self-Powered Electronic Access Control

KABA®

See Pages 7-12 For More Information

KABA®

Table of Contents

How to Order 3

Door Handing 3

Where to Order 3

For More Information 3

Terms and Conditions 4

E-PLEX® Series Products

2000 Series

- PIN Access
- Electronic Pushbutton Lock
- 100 Access Codes
- Includes new PowerStar™ Self-Powered Option (No Batteries to Replace)
- Cylindrical, Mortise, and Exit Trim
- ANSI/BHMA Grade-1 Certified

Pages 7-12

3000 Series

- PIN Access
- Electronic Pushbutton Lock
- 300 Access Codes
- 9,000 Audit Events
- Narrow Stile Applications
- Retrofits Various Adams Rite® Mortise Locking Devices

Pages 13-16

3200 Series

- PIN Access
- Electronic Access Control
- 3,000 Access Codes
- 30,000 Audit Events
- Narrow Stile Applications
- Retrofits Various Adams Rite® Mortise Locking Devices

Pages 17-19

3600 Series

- Compatible with Mifare®, DESFire® and iClass™ Smart Cards
- PIN/Card Access
- Electronic Access Control
- 3,000 Access Codes
- 30,000 Audit Events
- Narrow Stile Applications
- Retrofits Various Adams Rite® Mortise Locking Devices

Pages 20-22

3700 Series

- PIN/PROX Access
- Electronic Access Control
- 3,000 Access Codes
- 30,000 Audit Events
- Narrow Stile Applications
- Retrofits Various Adams Rite® Mortise Locking Devices

Pages 23-25

5000 Series

- PIN Access
- Electronic Pushbutton Lock
- 100 Access Codes
- 3,000 Audit Events
- Cylindrical, Mortise, Exit Trim and Controller
- ANSI/BHMA Grade-1 Certified

Pages 26-39

5200 Series

- PIN Access
- Electronic Access Control
- 3,000 Access Codes
- 30,000 Audit Events
- Access Schedules
- Cylindrical, Mortise, Exit Trim and Controller
- ANSI/BHMA Grade-1 Certified

Pages 40-53

5600 Series

- Compatible with Mifare®, DESFire® and iClass™ Smart Cards
- PIN/Card or Dual Credential
- 3,000 Access Codes
- 30,000 Audit Events
- Access Schedules
- Cylindrical, Mortise, Exit Trim and Controller
- ANSI/BHMA Grade-1 Certified

Pages 54-67

Table of Contents
(continued)

5700 Series
- PIN/PROX or Dual Credential
- Electronic Access Control
- 3,000 Access Codes
- 30,000 Audit Events
- Access Schedules
- Cylindrical, Mortise, Exit Trim and Controller
- ANSI/BHMA Grade-1 Certified

Pages 68-81

5800 Series
- PIN/FIPS 201 Card or Dual Credential
- 3,000 Access Codes
- 30,000 Audit Events
- Access Schedules
- Cylindrical, Mortise, Exit Trim and Controller
- ANSI/BHMA Grade-1 Certified

Pages 82-95

E-Plex® Software 96-102

E-Plex® Accessories 104-107

PowerLever® Series Products

1550 Series
- PIN Access
- 20 Users
- Cylindrical

Pages 108-110

4550/4560 Series
- PIN, SmartKey™ or Dual Credential Access
- 3,000 Users
- 23,000 Audit Events
- Access Schedules
- Cylindrical and Exit Trim

Pages 111-115

9550 Series
- PIN, PROX or Dual Credential Access
- 3,000 Users
- 30,000 Audit Events
- Access Schedules
- Cylindrical and Exit Trim

Pages 116-120

PowerLever® Accessories 121-122

For information—please visit our Web site at:
http://www.kabaaccess.com or contact Customer Service at: 1.800.849.8324

How to Order

To order any of the products in this catalog, a part number must be provided. In most situations the part number has to be assembled to specify the desired product, as various options are available.

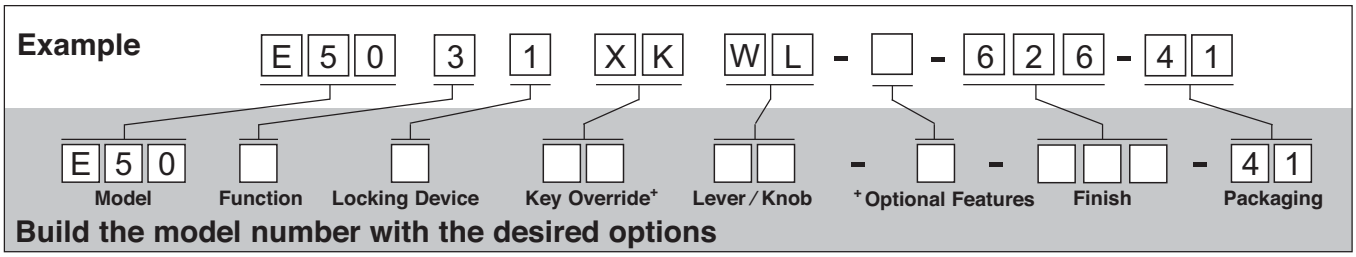

Door Handing

Some locks also require you to specify door handing. To determine handing, face the door from the exterior (access) side and select the corresponding diagram below.

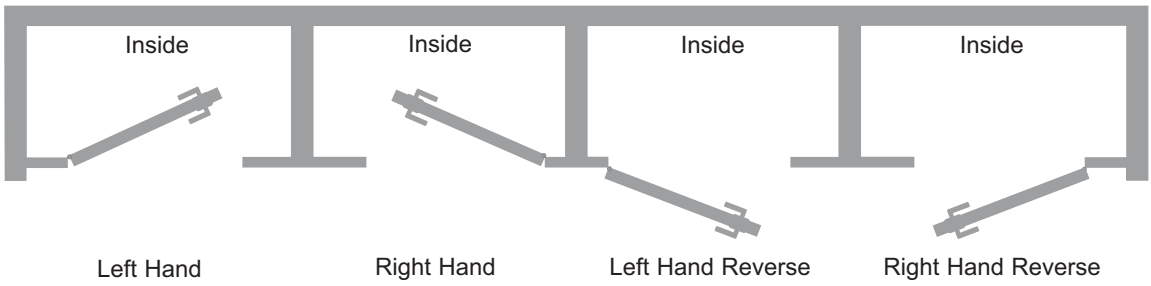

Where to Order

Contact your local supplier or call 1.800.849.8324 or 1.336.725.1331

For More Information

www.kabaaccess.com

The following are registered names and/or trademarks:
Abloy®, Adams Rite®, Arrow™, ASSA®, Corbin®, DESFire®, Detex®, iClass™, Kaba®, LearnLok™, Marks®, Medeco®, Microsoft®, Mifare®, Monarch®, Precision®, Sargent®, Schlage®, TWIC™, Von Duprin®, Yale®

General Terms and Conditions of Sale

General Terms and Conditions of Sale

1. **ENTIRE AGREEMENT:** This Agreement constitutes the entire agreement between KABA ILCO Corp. dba Kaba Access Control ("KABA") and the Purchaser, and contains all of the terms and conditions relating to the sale of the product(s). This agreement supersedes all prior agreements, previous catalog terms and conditions, and other documents unless expressly incorporated herein
2. **PAYMENT TERMS:** Unless otherwise stated, terms are net 30 days from the date of invoice. KABA reserves the right to charge interest at 1.5% per month (18% annually) on any overdue amounts. If KABA discovers that the Purchaser's financial condition does not warrant the above payment terms, then KABA, in its absolute discretion, may demand that the Purchaser pay in advance, pay cash upon delivery, or refuse Purchaser's order. In the latter case, KABA cannot be held liable for any damages of any nature whatsoever for its refusal to deliver goods in whole or in part.
3. **PRICES**: The product price(s) shall be according to KABA's price list in effect at the time of acceptance of the purchase order or according to its authorized quotation in force at the time of acceptance of the applicable purchase order.
4. **TAXES:** The price does not include any amounts for U.S. or International Federal Custom Duties, Canadian, U.S. or International Federal, Provincial, State, Local Excise, Goods and Services, Sales or Use, or Value added taxes. However, should KABA be obligated to pay any of the foregoing taxes, the Purchaser, upon demand, shall, within fifteen (15) days, reimburse KABA the total amount disbursed in respect thereof.
5. **MINIMUM ORDER REQUIREMENTS: The minimum order amount for all orders accepted is $400 USD**, excluding the shipping charges. This does not apply to cut keys.
6. **PRODUCT INFORMATION:** Unless expressly stated in this Agreement, all information contained in the product brochures, pamphlets, or information circulars, are for reference purposes only and based on the best information available at time of publication. KABA reserves the right to make reasonable changes in its products from time to time and to deliver the modified products.
7. **INSTALLATION:** Unless otherwise expressly stated, the costs and materials required for installation are not included in the prices and/or quotations.
8. **POINT OF DELIVERY & SHIPPING:** Delivery points and terms are FOB KABA warehouses in the USA and Canada for KABA products. Should Purchaser request a shipping method or carrier different than KABA's standard, then the full amount of the shipping cost will be invoiced to the Purchaser. Drop shipments to a third party are subject to a $25 surcharge, which is invoiced to Purchaser.
9. **DELIVERY TERMS:** KABA will notify the Purchaser if for any reason, it is unable to deliver the products as scheduled and cannot be held liable for any damages of any nature resulting from these delays.
10. **FORCE MAJEURE:** Should a delay in delivery be caused by a Force Majeure event, the time of delivery shall be extended by a reasonable amount of time with regard to all applicable circumstances. Upon mutual agreement, the parties shall set a new date for delivery. Except as to payments due hereunder, neither party shall be liable for failure to perform hereunder for the duration of and to the extent such failure is occasioned by a Force Majeure event, which is defined as follows: war, riots, insurrections, fire, flood, explosions, strikes and other labor or industrial disturbances, inevitable accidents, Government, State, Provincial or Municipal regulations and/or ordinances, an act of God, embargoes, blockades, delay in obtaining materials, legal restrictions, currency regulations, or any cause or condition beyond the reasonable control of the parties. Where such conditions continue for more than three (3) months, either party shall be free to terminate the Agreement. In the case of termination, KABA shall be paid the value proportionate to the Agreement price for the finished product and/or the work-in-progress as of the date of termination and the supportable costs.
11. **FAILURE TO ACCEPT DELIVERY:** If Purchaser fails to accept delivery at the scheduled time, the purchase price shall become due and payable in accordance with the original payment schedule and all risks associated with the product or parts of the product to be delivered, shall be borne by the Purchaser. Purchaser shall be responsible for all storage and handling costs incurred and to be incurred as a result thereof.
12. **TITLE:** Unless otherwise stipulated in this Agreement, ownership of the goods shall remain with KABA until full payment of the sale price has been received. Until complete payment has been received, Purchaser undertakes to warrant and keep the goods free and clear of all liens, other charges or encumbrances.
13. **RETURN POLICY:** Purchaser must obtain a Return Goods Authorization (RGA) number from KABA's Customer Service by calling in North America: (800) 849-8324 or Worldwide: (336) 725-1331, before returning any products whatsoever. The Purchaser must have the product serial number and invoice number pertaining to the original purchase available to give to the Customer Service Agent. KABA will send via Facsimile the Return Goods Authorization form, which includes the RGA number along with the "Ship To" address and RGA return instructions. RGAs expire after sixty (60) days from date of issuance. Returns of product by Purchaser are FOB KABA.

13.1 KABA warrants its new products free from design, material or workmanship flaws. Specific new product warranties vary according to products and are listed in the respective product section of the Access Control catalog or the respective product installation manual. Third party product(s) sold by KABA are warranted only to the extent provided by the original manufacturer's warranty and Purchaser must refer to the original manufacturer's warranty in such case. Refurbished or reconditioned KABA products are warranted for a ninety (90) day period from date of shipment. Failure of the Purchaser to notify KABA within the time limit set in the section shall constitute Purchaser's waiver to have the malfunction or damage remedied.

–continued

General Terms and Conditions of Sale (continued)

- The express warranties as set out herein, are the exclusive warranties provided under this Agreement and are in lieu of any other warranties, expressed or implied, statutory or otherwise, including but not limited to warranty of fitness for a particular purpose and merchantability. No distributor, dealer, sales representative and alike is authorized to bind KABA to any other warranty Agreement.
- KABA will, at their discretion and at no charge, either repair, exchange or replace the product provided it is returned complete to KABA during the warranty period. However, purchaser is responsible for the labor to remove and reinstall the product(s) from Purchaser's premises.
- Defective parts, which have been replaced, become the property of KABA who may dispose of them in any manner. Replacement parts become the property of the Purchaser upon their delivery.
- KABA is not liable for any defects in materials, designs, drawings or information provided by the Purchaser, nor for information which is missing and could not be reasonably identified as such, by KABA.
- KABA does not warrant the following:
  - (a) Normal wear and tear from use;
  - (b) Printer ribbons, batteries, key cards and other consumable parts used or supplied with the product;
  - (c) Damage of any nature to hardware finishes;
  - (d) Faulty or defective product operation(s) caused by unusual or unforeseeable use or conditions;
  - (e) Improper installation, operation or maintenance of the product;
  - (f) Any product or system in which KABA's product(s) is incorporated;
  - (g) Force majeure as defined by section 11 of this Agreement;
  - (h) Repairs or alterations carried out by anyone other than KABA;

13.2 **VARIANCE:** Any claims that the quantity and description of goods delivered and the quantity and description of goods ordered do not conform to this Agreement are waived unless the Purchaser advises KABA's Customer Service department in writing, within fifteen (15) days from the date of receipt of the product(s).

13.3 **RETURNS FOR CREDIT:** In order to return new merchandise, the Purchaser must obtain a Returned Goods Authorization (RGA) number from KABA Customer Service department. There is a twenty-five percent (25%) restocking charge applied to all returns of new product. Custom products cannot be returned for credit for any reason other than product failure. Credit will not be offered for product that is returned incomplete or damaged.

14. **LIMITATION OF LIABILITY:** The total liability of KABA for all claims of any kind, whether in contract, liability or otherwise, arising out of, connected with or resulting from KABA's performance or breach of this Agreement or services furnished hereunder shall in no event exceed the total purchase price expressed in this Agreement. KABA shall not under any circumstances be held liable for loss of profits or revenues, loss of use of product or any other product software, system, or facility, loss of data or information, lack or loss of productivity, interest charges or cost of capital, cost of substitute product, software, systems or services, cost of pur chases or replacement power, downtime costs, or for any special, indirect or consequential damages of any nature.

15. **ASSIGNMENT:** KABA may assign this Agreement in whole or in part, to any parent, subsidiary or affiliated corporation. Subject to the prior written approval of KABA, Purchaser may assign the present Agreement to any parent, subsidiary or affiliated corporation.

16. **DAMAGES:** If Purchaser does not fulfill its obligations or is in default or breach of contract by the terms of this Agreement, KABA may then terminate the agreement by notice in writing as set out on the face of KABA's acknowledgement. KABA has the right to claim compensation for any loss it incurs as a result of Purchaser's default.

17. **APPLICABLE LAW:** This Agreement shall be governed by and construed in accordance with the laws of the State of North Carolina, USA.

18. **TERMINATION:** If the Purchaser terminates this Agreement, in whole or in part, by written notice, KABA will, upon receipt of the termination notice, cease the performance of the contract according to the instructions of the Purchaser. In such a case, Purchaser shall be invoiced for costs incurred depending on the nature of the product.

19. **SEVERABILITY:** Any term, condition or provision of this Agreement, or any part thereof, which is or may be found to be prohibited or unenforceable in any jurisdiction shall, as regards such jurisdiction and to the extent of such prohibition or unenforceability, be deemed to be severed from this Agreement, and the remaining terms, conditions and provisions of this Agreement shall remain in full force and effect.

20. **WAIVER:** Any act or omission by KABA will not constitute or be deemed to be a waiver of the rights granted to KABA by the terms of this Agreement.

21. **SPECIAL CLAUSES FOR KEY CONTROL PRODUCTS:**
  (a) For combinated products, master keying is included in the product price.
  (b) KABA will only accept orders for key blanks, cut keys and combinated cylinders if the appropriate and current authorizations are enclosed, which depend upon the product and key section.
  (c) Cylinders should be ordered in multiples of 10.
  (d) Failure to use genuine KABA components will void all warranties.
  (e) Laser cutting key blanks void all warranties.

Disclaimer: While reasonable efforts were made to ensure the accuracy of this document at the time of printing, Kaba assumes no liability for any errors or omissions. This information is subject to be revised without notice, and changes may be incorporated in future releases.

Notes

- **PIN Access**
- **Electronic Pushbutton Lock**
- **100 Access Codes**
- **PowerStar™ Self-Powered Option**
- **Cylindrical, Mortise, and Exit Trim**
- **ANSI/BHMA Grade-1 Certified**

New PowerStar™ Self-Powered Option– (No Batteries to Replace)

Features

Access Control:	Electronic pushbutton lock–eliminates problems and costs associated with issuing, controlling and collecting keys, and cards. Provides exterior access by PIN code, while allowing free egress. The E-Plex 2000 series of locks are available in two different power configurations: **E2000–**locks are powered by 3 AA batteries that load into a slide-up battery tray in the outside housing which eliminates wires through the door and allows for continuous operation up to 100,000 cycles. **EPS2000–**PowerStar™ locks are self-powered electronic locks that do not require batteries or other power sources. The lock generates its own power with every turn of the lever, making it the most efficient and versatile electronic lock set available with virtually no maintenance costs.
No Wires:	Requires no wiring to or through the door–eliminates risk of damage from pinched wires that can result in costly callbacks
Locking Device Options:	• Cylindrical: Cylindrical latch with 3-hour UL/ULC fire rating • Rim Exit Device: Compatible with most leading brands of Exit Devices (Exit Device and Mounting Hardware not included) • American Standard Mortise: With 1 ¼" (32 mm) faceplate; with and without deadbolt, auto deadbolt also available
Number of Codes:	Multiple Users–100 Codes
Handing:	Non-handed; pre-assembled for left-hand door installations–easily changed in the field
Programming:	Lock is easily programmed via keypad without removing lock from the door
Key Override (Optional):	• Optional Key-in-Lever cylinder in Schlage "C" Keyway with black Kaba cap • Small format–Best and equivalent (6 or 7-pin length)
Operation Modes:	• PIN access • Passage–can be toggled on/off or can be pre-programmed to re-lock after a certain number of hours • Lockout
Authority Levels:	Four different levels allow you to control who has access to specific lock functions, including: Service Codes–programmed for one-time access or "come-and-go" access for 1-to-24 hours
User Parameters:	Code length–Adjustable to accept 4-to-8 digits Anti-tamper lockout–Adjustable from 3-to-9 invalid attempts with an adjustable period of 0-to-90 seconds Re-lock time–Adjustable from 2-to-20 seconds

E-Plex®
2000 Series

KABA®

Features (continued)

Lock Power:	**Battery Powered (E2000 Series)—**Batteries located in outside housing; offers quick and easy battery replacements (Three AA Alkaline batteries provide up to 100,000 cycles); lock data is maintained if batteries fail. **Self Powering (EPS2000 Series)—**Kaba's Patented PowerStar™ technology supplies power for all electronic lock functions including programming users at the keypad without ever having to change batteries. With just a turn of the lever, a valid code can be entered and access is granted.
Exit Device Compatibility:	• Detex Rim # F1001 • Detex Surface Vertical Rod #s 20/F20 • Dorma Rim # F9300 • Precision Rim #s 21/FL21 • Precision Surface Vertical Rod #s 22/FL22 • Von Duprin Concealed Vertical Rod #s 9847/9947 • Von Duprin Mortise #s 9875/9975 • Von Duprin Rim #s 89/99 • Von Duprin Surface Vertical Rod #s 9827/9927 • Yale Concealed Vertical Rod #7160 • Yale Rim #7100 **ATTENTION: Compatibility is subject to change if modifications are made by Exit Device manufacturers without Kaba Access Control's knowledge.**

Mechanical Features

Construction:	Heavy-duty commercial Grade 1 lockset, solid cast exterior housing, solid cast levers, cylindrical drive wear tested for extensive use in indoor and outdoor applications
Numeric Keypad:	Vandal resistant, solid metal pushbuttons
Handing:	Non-handed, pre-assembled for left hand door installation—easily changed in the field
Finishes:	Satin Chrome 626 (26D) housings and levers, Satin Brass 606 (04) housings and levers (optional)
Backset:	**Cylindrical:** 2 ¾" (70 mm) backset, 2 ⅜" (60 mm) backset **Mortise**: 2 ¾" (70 mm) backset **Exit Trim Model:** Varies by exit device
Latches:	Cylindrical Models: ½" (13 mm) throw latch, ¾" (19 mm) throw latch (optional) Mortise Models: ¾" (19 mm) latch, 1" (25 mm) deadbolt (optional)
Minimum Stile Required:	5" (127 mm)
Weight:	Cylindrical and Mortise Models: 8 lbs (3.63 kg)
Exit Trim Models:	10 lbs (4.54 kg)

Key Override Options

Key-in-Lever Cylinder:	Kaba 1539 6-pin cylinder—Schlage "C" Keyway
Interchangeable Core:	Small format—Best and equivalent (6 or 7-pin length); cylinder not included

Installation

Ease of Installation:	No wiring to or through the door—no risk of pinched wires
Door Preparation:	**Cylindrical and Exit Trim–**ASA 161 (Easily installs on door preparation with three additional through bore holes (wood or metal doors) **Mortise–**ASA 86 door preparation with three additional through bore holes
Door Thickness:	Cylindrical Model: 1 3⁄8" (35 mm) to 2 1⁄2" (64 mm); pre-assembled to accommodate doors 1 5⁄8" (41 mm) to 2" (50 mm)
Exit Trim and Mortise Models:	1 3⁄4" (44 mm) to 2 1⁄4" (57 mm). Pre-assembled to accommodate doors 1 3⁄4" (44 mm) to 2 1⁄8" (54 mm)
Items Supplied Include:	**Cylindrical and Mortise-**Lock assembly, installation manual, template, quick reference guide, operations manual, and required hardware **Exit Trim–**Lock assembly, installation manual, template, quick reference guide, operations manual, and required hardware. Exit Device and mounting hardware not included
Additional Items Supplied with Key-in-Lever cylinder model only:	Includes Universal Kaba 1539 6-pin cylinders two nickel silver keys, and Schlage "C" Keyway
Accessibility Standard:	Americans with Disabilities Act (ADA)
Fire Rating:	UL 10C Fire rated
Durability:	ANSI/BHMA Grade 1 certified (A156.25, A156.2, A156.13, A156.3)
Environmental:	Indoor/Outdoor Approved; -31° F (-25° C) to +151° F (66° C)

Warranty

Warranty:	2-year warranty from date of installation; built-in warranty counter in lock memory

Cylindrical

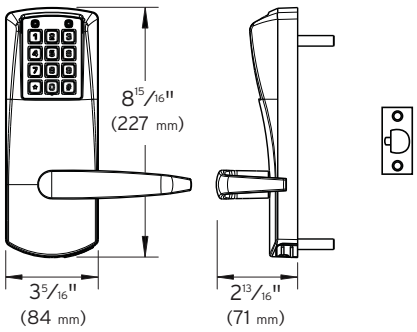

E2000 Exterior

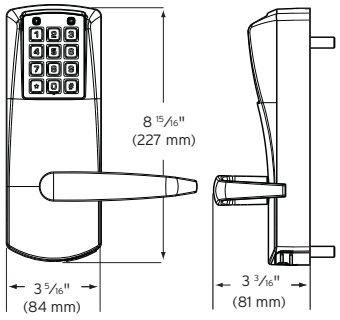

EPS2000 Exterior

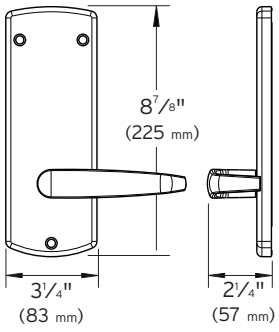

Interior

E-Plex®

2000 Series

KABA®

Mortise

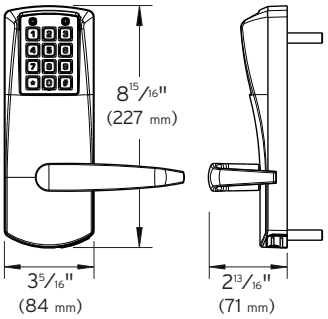

E2000 Exterior

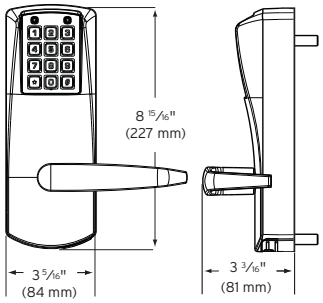

EPS2000 Exterior

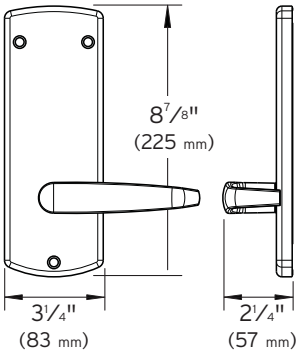

Interior

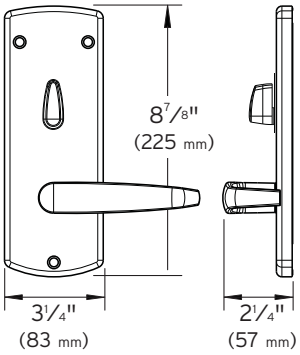

Interior

Optional Features

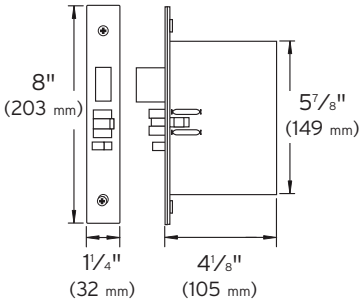

Deadbolt

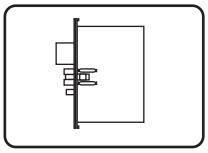

No Deadbolt

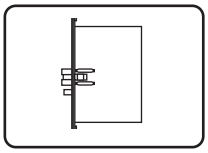

Auto-Deadbolt

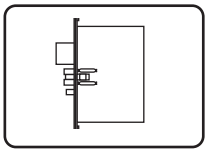

Exit Trim

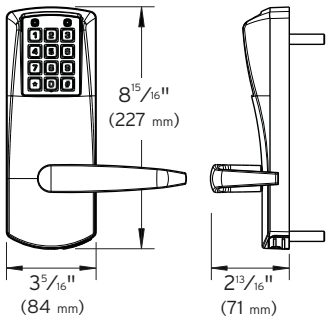

E2000 Exterior

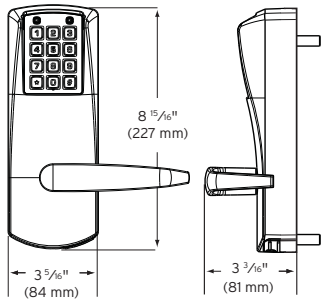

EPS2000 Exterior

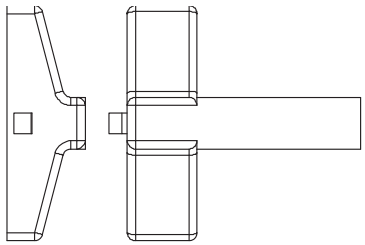

Interior

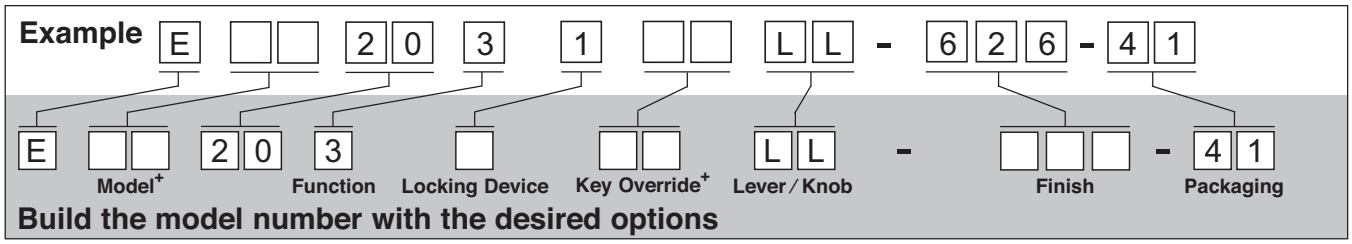

+ Leave blank for solid lever without Key Override and Non-PowerStar™ Locks

Base Model	Description	Base Price
E2031LL62641	E2000, Cylindrical, No Key Override 100 Access Codes	$425.00

Choose one option from each category

Model Option	Description	Price
(Leave Blank)	E-Plex Battery Powered Lock	No Charge
PS	PowerStar™ Self Powering Option	Add $250.00

Function Options	Description	Price
1	Exit Trim—Rim, Mortise, Surface Vertical Rod	Add $100
2	Exit Trim—Concealed Vertical Rod (use **only** for Yale #7160 or Von Duprin #s 9847/9947)	Add $100
3	Cylindrical Lock (cyl)	No Charge
5	Cylindrical with Privacy (cyl)	Add $100.00
6	American Steel Mortise (ASM)	Add $120.00

Locking Device Options	Description	Price
1	Cylindrical ½" (13 mm) throw latch, floating face plate 2 ¾" (70 mm) backset	No Charge
2	Cylindrical ½" (13 mm) throw latch, floating face plate 2 ⅜" (60 mm) backset	No Charge
6	STD Mortise 1¼" Face Plate No Deadbolt (Non-Handed)	No Charge
7	STD Mortise 1¼" Face Plate With Deadbolt (Non-Handed)	Add $30.00
A	STD Mortise 1¼" Face Plate With Auto Deadbolt (Non-Handed)	Add $30.00
U	Exit Trim—Use **only** for: Detex Rim # F1001 Detex Surface Vertical Rod #s 20/F20 Dorma Rim # F9300 Von Duprin Rim #s 89/99 Von Duprin Surface Vertical Rod #s 9827/9927 Precision Rim #s 21/FL21 Precision Surface Vertical Rod #s 22/FL22	No Charge
Y	Exit Trim—Use **only** for Yale models below: Yale Concealed Vertical Rod #7160 Yale Rim #7100	No Charge
V	Exit Trim—Use **only** for Von Duprin models below: Von Duprin Concealed Vertical Rod #s 9847/9947 Von Duprin Mortise #s 9875/9975	No Charge

Key Override Options+	Description	Price
(Leave Blank)	Solid Lever without Key Override	No Charge
XS	Key-In-Lever, Kaba Cylinder (Schlage "C" Keyway) Included	Add $50.00
B	Best and Equivalents (6 or 7-pin length); Cylinder not Included	Add $50.00

Lever/Knob Options	Description	Price
LL	Lever—Long	No Charge

Finish Options	Description	Price
606	Satin Brass (04)	Add $25.00
626	Satin Chrome (26D)	No Charge

E-Plex®
2000 Series

KABA®

Notes

Levers are not interchangeable

Items Supplied with the Lock

- Installation Manual
- Quick Reference Guide
- Operations Manual
- Full-Scale Template
- Required Installation Hardware

Additional Items Supplied with Standard Model Only

- Universal Kaba High Security 1539 Cylinder with Schlage “C” Keyway

- **PIN Access**
- **Electronic Pushbutton Lock**
- **300 Access Codes**
- **9,000 Audit Events**
- **Narrow Stile Applications**
- **Retrofits Various Adams Rite® Mortise Locking Devices**

Features

Access Control:	Electronic pushbutton lock for narrow stile aluminum glass doors—eliminates problems and costs associated with issuing, controlling and collecting keys and cards
Locking Devices:	Retrofits inside trim for Adams Rite® locks 1850, 1950, 4070, 4510, 4520, 4530, 4710, 4720, 4730, 4900, 4920AN, MS 1850S, MS 1950S, and 8400 Series (Not Included). Adapter kit available for various manufacturers' narrow stile exit devices
Number of Codes:	300 access codes per door; over 100 million possible code combinations
Audit Trail:	The most recent 9,000 lock events are recorded in memory including use of the mechanical key override
Programming:	Locks are programmed via keypad or with *optional* Microsoft Excel based software—simplifies management of doors and users as facility's number of users and access points grow
Operation Modes:	• PIN access • Lockout • Passage—PIN or key enabled, can be pre-programmed to re-lock after a certain number of hours (from 1 to 24) • Latch Holdback—PIN or key enabled, lever activated
Authority Levels:	Five different levels allow you to control who has access to specific lock functions, including: Service Codes—programmed for one-time access or "come-and-go" access for 1-to-24 hours
User Parameters:	Code length: Adjustable to accept 4 to 8 digits Anti-tamper lockout: Adjustable form 3 to 9 invalid attempts with an adjustable period of 0 to 90 seconds Re-lock time: Adjustable from 2 to 20 seconds
Battery Operation:	Batteries located in tamper proof base of outside housing. Four AA Alkaline batteries provide up to 180,000 cycles. Lock data is maintained if batteries fail. Warning light notifies low battery.
Ease of Installation:	No wire installation—eliminates wiring to or through the door—no risk of pinched wires

Mechanical Features

Construction:	Extra heavy-duty lockset, solid cast housing, solid cast lever or thumbturn wear tested for extensive use in indoor and outdoor applications

E-Plex®

3000 Series

KABA®

Numeric Keypad:	Vandal resistant, solid metal pushbuttons
Handing:	Non-handed, easily changed in the field
Standard Finish:	Satin Chrome 626 (26D) housing and lever
Optional Finish:	Dark Bronze 744 (Simulates 10B/613) housing with Brass push buttons
Backset:	31/32" (25 mm) minimum
Minimum Stile Recommended:	2" (51 mm)
Weight:	5.1 lbs. (2.3 kg)

Key Override

Mortise Cylinder:	Mortise Cylinder in Schlage "C" Keyway
Interchangeable Cores:	Optional Mortise Shell accommodates Small format–Best and equivalent (6-pin length)

Installation

Ease of Installation:	No wire installation–eliminates wiring to or through the door–no risk of pinched wires
Door Preparation:	Easily installs on narrow stile doors with 4 mounting screws
Door Thickness:	1 3/4" (44 mm)
Items Supplied Include:	Lock assembly, installation manual, quick reference guide, operations manual, installation template, cylinder, mounting hardware, and batteries

Certification and Testing

Accessibility Standard:	American with Disabilities Act (ADA)
Durability:	Designed and fully tested to meet rigid life cycle test and operating reliability per BHMA Grand 1 requirements.
Environmental:	Indoor/Outdoor Approved Front Housing : 31° F (-35° C) to +151° F (66° C

Warranty

Warranty:	3-year warranty from date of installation; built-in warranty counter in lock memory

Narrow Stile Lock

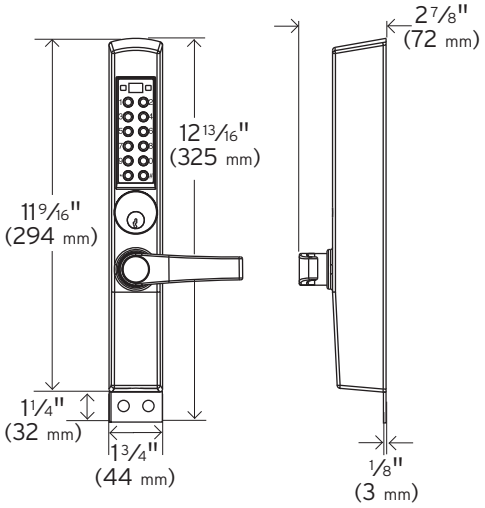

Exterior With Lever

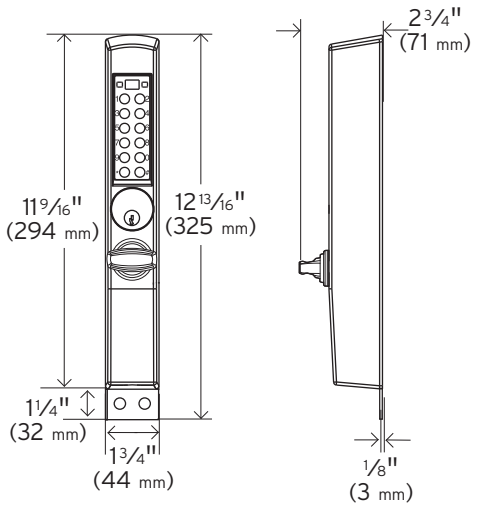

Exterior With Thumbturn

Optional Features

PC Software

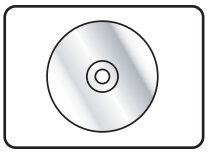

Remote Unlock

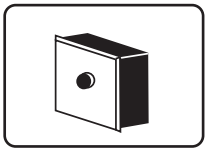

Example E 3 0 | 6 | 5 | M S | N L - ☐ - 6 2 6 - 4 1

E 3 0	☐	☐	☐☐	☐☐ - ☐ - ☐☐☐ - 4 1
Model	Function	Locking Device	Key Override+	Lever / Thumbturn + Optional Features / Finish / Packaging

Build the model number with the desired options

Base Model	Description	Base Price
E3065MSNL62641	E3000, Mortise, Deadlatch, Lever, Schlage “C” Keyway 300 Access Codes	$600.00

Choose one option from each category

Function Options	Description	Price
6	Mortise (Adams Rite) Note: For Exit Device compatibility and adapter Kit, please see E-Plex 3x00 Series Accessories Section	No Charge

Locking Device Options	Description	Price
5	Mortise Dead Latch for Adams Rite 4070, 4510, 4520, 4530, 4710, 4720, 4730, 4900 and 4920AN. Also fits 8400 Mortise Exit	No Charge
6	Mortise Deadbolt for Adams Rite 1850, 1950, MS 1850S and MS 1950S	No Charge

Key Override Options ++	Description	Price
MK	Mortise, Kaba Cylinder (Kaba 90 Keyway) Included	No Charge
MS	Mortise, Kaba Cylinder (Schlage “C” Keyway) Included	No Charge
B	Mortise, I/C Housing, Best and Equivalents (6-pin Length); Cylinder not Included	No Charge

Lever/Thumbturn Options	Description	Price
NL	Narrow Stile Lever	No Charge
NT	Narrow Stile Thumbturn	No Charge

Optional Features +	Description	Price
0	Remote Unlock—Lock supplied with pigtail ready to wire to remote momentary contact switch (not included)	Add $80.00

Finish	Description	Price
626	Satin Chrome (26D)	No Charge
744	Dark Bronze with Brass Accents (simulated 10B/613)	Add $100.00

E-Plex®
3000 Series

KABA®

Notes

Software Optional	Description	Price
EP-STD-xx-001	E-Plex 3000/5000 Standard Software Implementation Kit (Excel-Based Templates)–300 Users (See E-Plex Software section of this catalog for additional information)	$500.00

xx=version number.
Please see kabaaccess.com/software
to determine most current version number.

+ Optional Features

This field may be left blank if no optional features are required

++ Interchangeable/Removable core cylinders are not included with the lock

Items Supplied with the Lock

- Installation Manual
- Quick Reference Guide
- Operations Manual
- Full-Scale Template
- Required Installation Hardware
- Tailpiece for Specified Key Override

Additional Items Supplied with Standard Model Only

- Universal Kaba High Security mortise cylinder (includes two nickel silver keys)

E-Plex®
3200 Series

- **PIN Access**
- **Electronic Access Control**
- **3000 Access Codes**
- **30,000 Audit Events**
- **Narrow Stile Applications**
- **Retrofits Various Adams Rite® Mortise Locking Devices**

Features

Access Control:	Electronic pushbutton lock for narrow stile aluminum glass doors—eliminates problems and costs associated with issuing, controlling and collecting keys and cards
Locking Devices:	Retrofits inside trim for Adams Rite® locks 1850, 1950, 4070, 4510, 4520, 4530, 4710, 4720, 4730, 4900, 4920AN, MS 1850S, MS 1950S, and 8400 Series (Not Included). Adapter kit available for various manufacturers' narrow stile exit devices
Number of Users:	Multiple Users—3,000 Users; over 100 million possible code combinations
Audit Trail:	30,000 Events
Programming:	Locks are programmed with required Enterprise software—simplifies management of doors and users for larger facilities as number of users and access points grow
Operation Modes:	• PIN access • Lockout • Passage—PIN or key enabled, can be pre-programmed to re-lock after a certain number of hours (from 1 to 24) • Latch Holdback—PIN or key enabled, lever activated
Authority Levels:	Six different levels allow you to control who has access to specific lock functions, including: Service Level—codes from single event up to 4-day access, programmable in advance
User Parameters:	Code length: Adjustable to accept 4 to 8 digits Anti-tamper lockout: Adjustable form 3 to 9 invalid attempts with an adjustable period of 0 to 90 seconds Re-lock time: Adjustable from 2 to 20 seconds
Battery Operation:	Batteries located in tamper proof base of outside housing. Four AA Alkaline batteries provide up to 180,000 cycles. Lock data is maintained if batteries fail. Warning light indicates low battery.
Ease of Installation:	No wire installation—eliminates wiring to or through the door—no risk of pinched wires

Mechanical Features

Construction:	Extra heavy-duty lockset, solid cast housing, solid cast lever or thumbturn wear tested for extensive use in indoor and outdoor applications

E-Plex®
3200 Series

KABA®

Numeric Keypad:	Vandal resistant, solid metal pushbuttons
Handing:	Non-handed, easily changed in the field
Standard Finish:	Satin Chrome 626 (26D) housing and lever
Optional Finish:	Dark Bronze 744 (Simulates 10B/613) housing with Brass push buttons
Backset:	31/32" (25 mm) minimum
Minimum Stile Recommended:	2" (51 mm)
Weight:	5.1 lbs. (2.3 kg)

Key Override

Mortise Cylinder:	Mortise Cylinder in Schlage "C" Keyway
Interchangeable Cores:	Optional Mortise Shell accommodates Small format–Best and equivalent (6-pin length)

Installation

Ease of Installation:	No wire installation–eliminates wiring to or through the door–no risk of pinched wires
Door Preparation:	Easily installs on narrow stile doors with 4 mounting screws
Door Thickness:	1 3/4" (44 mm)
Items Supplied Include:	Lock assembly, installation manual, quick reference guide, operations manual, installation template, cylinder, mounting hardware, and batteries

Certification and Testing

Accessibility Standard:	American with Disabilities Act (ADA)
Durability:	Designed and fully tested to meet rigid life cycle test and operating reliability per BHMA Grand 1 requirements.
Environmental:	Indoor/Outdoor Approved Front Housing : 31° F (-35° C) to +151° F (66° C

Warranty

Warranty:	3-year warranty from date of installation; built-in warranty counter in lock memory

Narrow Stile Lock

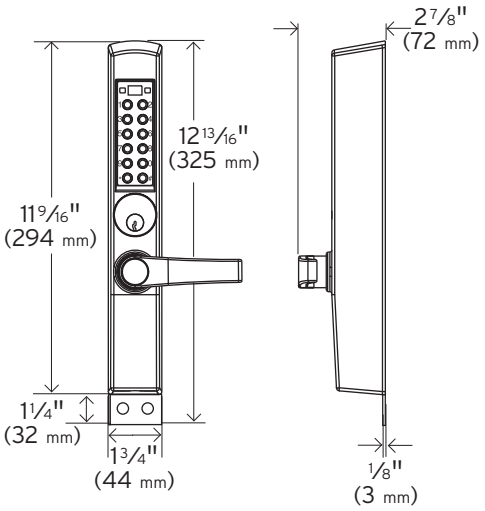

Exterior With Lever

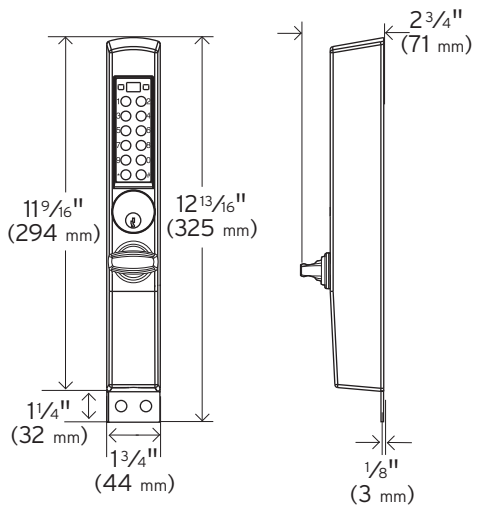

Exterior With Thumbturn

Required Feature

PC Software

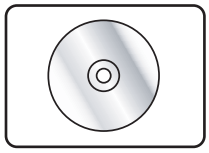

Optional Feature

Remote Unlock

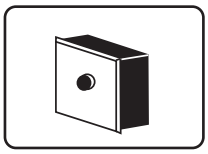

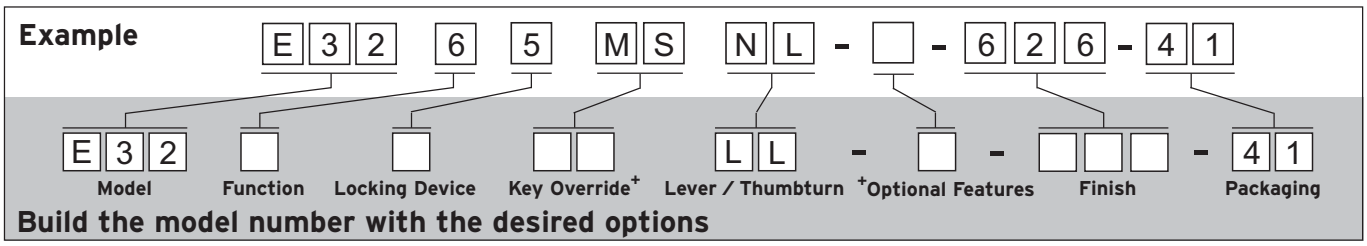

Base Model	Description	Base Price
E3265MSNL62641	E3200, Mortise, Deadlatch, Lever, Schlage “C” Keyway 300 Access Codes, 30,000 Audit Events	$750.00

Choose one option from each category

Function Options	Description	Price
6	Mortise (Adams Rite) Note: For Exit Device compatibility and adapter Kit, please see E-Plex 3x00 Series Accessories Section	No Charge

Locking Device Options	Description	Price
5	Mortise Dead Latch for Adams Rite 4070, 4510, 4520, 4530, 4710, 4720, 4730, 4900 and 4920AN. Also fits 8400 Mortise Exit	No Charge
6	Mortise Deadbolt for Adams Rite 1850, 1950, MS 1850S and MS 1950S	No Charge

Key Override Options	Description	Price
MS	Mortise, Kaba Cylinder (Schlage “C” Keyway) Included	No Charge
B	Mortise, I/C Housing, Best and Equivalents (6-pin Length); Cylinder not Included	No Charge

Lever/Thumbturn Options	Description	Price
NL	Narrow Stile Lever	No Charge
NT	Narrow Stile Thumbturn	No Charge

Optional Features	Description	Price
0	Remote Unlock—Lock supplied with pigtail ready to wire to remote monumentary contact switch (not included)	Add $80.00

Finish Option	Description	Price
626	Satin Chrome (26D)	No Charge
744	Dark Bronze with Brass Accents (simulated 10B/613)	Add $100.00

Notes

E-Plex® 3200 Series Accessories (Required)

Model Number	Description	Price
EP-EPRISE-xx-001 xx=version number. Please see kabaaccess.com/software to determine most current version number.	Enterprise Software Implementation Kit (See E-Plex Software section of this catalog for additional information)	$700.00

E-Plex®
3600 Series

KABA®

- **Compatible with Mifare®, DESFire® and iClass™ Smart Cards**
- **PIN/Card Access**
- **Electronic Access Control**
- **3,000 Access Codes**
- **30,000 Audit Events**
- **Narrow Stile Applications**
- **Retrofits Various Adams Rite® Mortise Locking Devices**

Features

Access Control:	Electronic PIN/Smart Card lock for narrow stile aluminum glass doors—PIN and/or Smart card (13.56 MHz). Lock is scheduled to require credentials based on security and convenience requirements. • PIN only • Smart card only • PIN + Smart card
Locking Devices:	Retrofits inside trim for Adams Rite® locks 1850, 1950, 4070, 4510, 4520, 4530, 4710, 4720, 4730, 4900, 4920AN, MS 1850S, MS 1950S, and 8400 Series (Not Included). Adapter kit available for various manufacturers' narrow stile exit devices
Number of Users:	Multiple Users—3,000 Access Users; (300 using LearnLok™ feature)
Audit Trail:	30,000 Events with optional software
Programming:	Locks are programmed via keypad with LearnLok™ feature or via optional E-Plex Advanced Software provides easy management of doors and users
Operation Modes:	• PIN, card or dual credential access • Lockout • Passage—PIN or key enabled, can be pre-programmed to re-lock after a certain number of hours (from 1 to 24) • Latch Holdback—PIN or key enabled, lever activated
Authority Levels:	Six different levels allow you to control who has access to specific lock functions, including: Service Level—codes from single event up to 4-day access, programmable in advance, and super user with 24-7 PIN access
User Parameters:	Code length: Adjustable to accept 4 to 8 digits Anti-tamper lockout: Adjustable form 3 to 9 invalid attempts with an adjustable period of 0 to 90 seconds Re-lock time: Adjustable from 2 to 20 seconds
Battery Operation:	Batteries located in tamper proof base of outside housing. Four AA Alkaline batteries provide up to 180,000 cycles. Lock data is maintained if batteries fail. Warning light notifies low battery.
Ease of Installation:	No wire installation—eliminates wiring to or through the door—no risk of pinched wires

Mechanical Features

Construction:	Extra heavy-duty lockset, solid cast housing, solid cast lever or thumbturn wear tested for extensive use in indoor and outdoor applications

Numeric Keypad:	Vandal resistant, solid metal pushbuttons
Handing:	Non-handed, easily changed in the field
Standard Finish:	Satin Chrome 626 (26D) housing and lever
Optional Finish:	Dark Bronze 744 (Simulates 10B/613) housing with Brass push buttons
Backset:	31/32" (25 mm) minimum
Minimum Stile Recommended:	2" (51 mm)
Weight:	5.1 lbs. (2.3 kg)

Key Override

Mortise Cylinder:	Mortise Cylinder in Schlage "C" Keyway
Interchangeable Cores:	Optional Mortise Shell accommodates Small format–Best and equivalent (6-pin length)

Installation

Ease of Installation:	No wire installation–eliminates wiring to or through the door–no risk of pinched wires
Door Preparation:	Easily installs on narrow stile doors with 4 mounting screws
Door Thickness:	1 3/4" (44 mm)
Items Supplied Include:	Lock assembly, installation manual, quick reference guide, operations manual, installation template, cylinder, mounting hardware, and batteries

Certification and Testing

Accessibility Standard:	American with Disabilities Act (ADA)
Durability:	Designed and fully tested to meet rigid life cycle test and operating reliability per BHMA Grand 1 requirements.
Environmental:	Indoor/Outdoor Approved Front Housing : 31° F (-35° C) to +151° F (66° C

Warranty

Warranty:	3-year warranty from date of installation; built-in warranty counter in lock memory

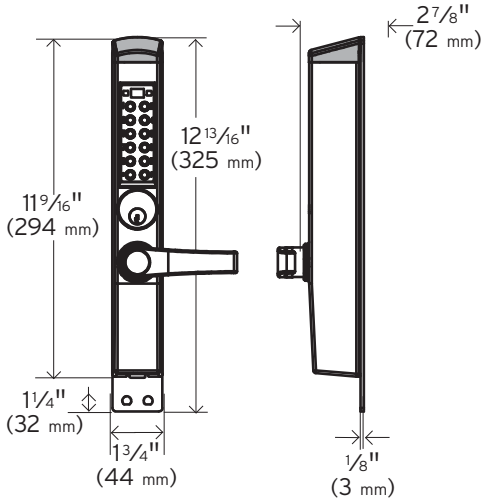

Exterior With Lever

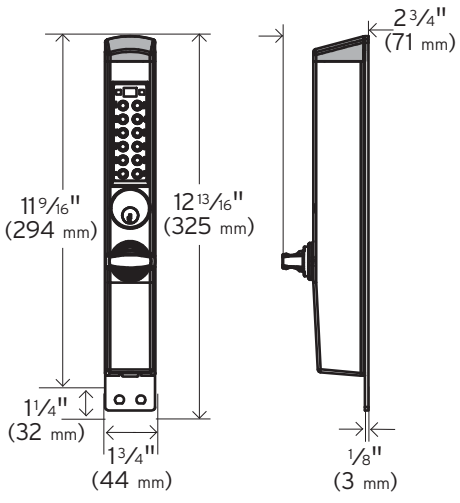

Exterior With Thumbturn

Optional Features

PC Software

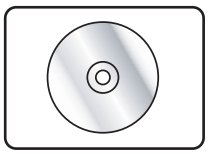

Remote Unlock

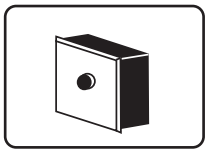

E-Plex®
3600 Series

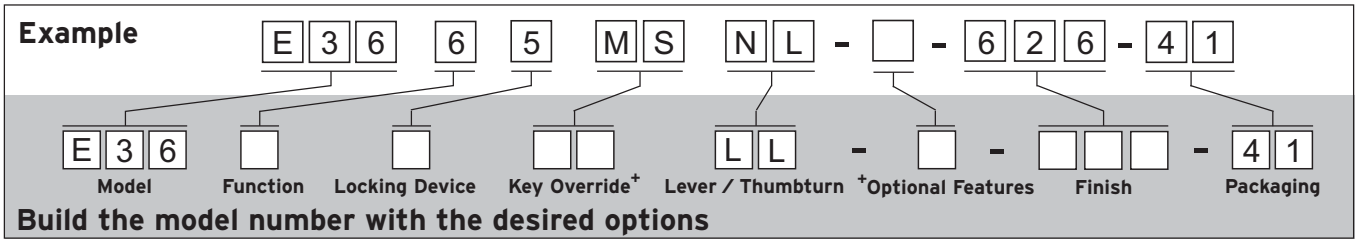

Base Model	Description	Base Price
E3665MSNL62641	E3600, Mortise, Deadlatch, Lever, Schlage “C” Keyway 3000 Access Codes, 30,000 Audit Events	$1050.00

Choose one option from each category

Function Options	Description	Price
6	Mortise (Adams Rite) Note: For Exit Device compatibility and adapter Kit, please see E-Plex 3x00 Series Accessories Section	No Charge

Locking Device Options	Description	Price
5	Mortise Dead Latch for Adams Rite 4070, 4510, 4520, 4530, 4710, 4720, 4730, 4900 and 4920AN. Also fits 8400 Mortise Exit	No Charge
6	Mortise Deadbolt for Adams Rite 1850, 1950, MS 1850S and MS 1950S	No Charge

Key Override Options	Description	Price
MS	Mortise, Kaba Cylinder (Schlage “C” Keyway) Included	No Charge
B	Mortise, I/C Housing, Best and Equivalents (6-pin Length); Cylinder not Included	No Charge

Lever/Thumbturn Options	Description	Price
NL	Narrow Stile Lever	No Charge
NT	Narrow Stile Thumbturn	No Charge

Optional Features	Description	Price
0	Remote Unlock—Lock supplied with pigtail ready to wire to remote monumentary contact switch (not included)	Add $80.00

Finish Option	Description	Price
626	Satin Chrome (26D)	No Charge
744	Dark Bronze with Brass Accents (simulated 10B/613)	Add $100.00

Notes

E-Plex® 3600 Series Accessories (Optional)

Model Number	Description	Price
EP-EPRISE-xx-001 xx=version number. Please see kabaaccess.com/software to determine most current version number.	Enterprise Software Implementation Kit (See E-Plex Software section of this catalog for additional information)	$700.00
120-ENSC-000	USB Smart Card Reader/Enroller (Required with software above)	$440.00

- **PIN/PROX Access**
- **Electronic Access Control**
- **3,000 Access Codes**
- **30,000 Audit Events**
- **Narrow Stile Applications**
- **Retrofits Various Adams Rite® Mortise Locking Devices**

Features

Access Control:	Electronic PIN/PROX lock for narrow stile aluminum glass doors—with dual credential capability—PIN and/or PROX card (HID, 125 kHz, 26 to 84-bit format). Lock is scheduled to require credentials based on security and convenience requirements. • PIN only • PROX card only • PIN + PROX card
Locking Devices:	Retrofits inside trim for Adams Rite® locks 1850, 1950, 4070, 4510, 4520, 4530, 4710, 4720, 4730, 4900, 4920AN, MS 1850S, MS 1950S, and 8400 Series (Not Included). Adapter kit available for various manufacturers' narrow stile exit devices
Number of Users:	Multiple Users—3,000 Access Users; (300 using LearnLok™ feature)
Audit Trail:	30,000 Events with optional software
Programming:	Locks are programmed via keypad with LearnLok™ feature or via optional E-Plex Advanced Software provides easy management of doors and users
Operation Modes:	• PIN, card or dual credential access • Lockout • Passage—PIN or key enabled, can be pre-programmed to re-lock after a certain number of hours (from 1 to 24) • Latch Holdback—PIN or key enabled, lever activated
Authority Levels:	Six different levels allow you to control who has access to specific lock functions, including: Service Level—codes from single event up to 4-day access, programmable in advance, and super user with 24-7 PIN access
User Parameters:	Code length: Adjustable to accept 4 to 8 digits Anti-tamper lockout: Adjustable form 3 to 9 invalid attempts with an adjustable period of 0 to 90 seconds Re-lock time: Adjustable from 2 to 20 seconds
Battery Operation:	Batteries located in tamper proof base of outside housing. Four AA Alkaline batteries provide up to 180,000 cycles. Lock data is maintained if batteries fail. Warning light notifies low battery.
Ease of Installation:	No wire installation—eliminates wiring to or through the door—no risk of pinched wires

Mechanical Features

Construction:	Extra heavy-duty lockset, solid cast housing, solid cast lever or thumbturn wear tested for extensive use in indoor and outdoor applications

E-Plex®
3700 Series

KABA®

Numeric Keypad:	Vandal resistant, solid metal pushbuttons
Handing:	Non-handed, easily changed in the field
Standard Finish:	Satin Chrome 626 (26D) housing and lever
Optional Finish:	Dark Bronze 744 (Simulates 10B/613) housing with Brass push buttons
Backset:	31/32" (25 mm) minimum
Minimum Stile Recommended:	2" (51 mm)
Weight:	5.1 lbs. (2.3 kg)

Key Override

Mortise Cylinder:	Mortise Cylinder in Schlage "C" Keyway
Interchangeable Cores:	Optional Mortise Shell accommodates Small format–Best and equivalent (6-pin length)

Installation

Ease of Installation:	No wire installation–eliminates wiring to or through the door–no risk of pinched wires
Door Preparation:	Easily installs on narrow stile doors with 4 mounting screws
Door Thickness:	1 3/4" (44 mm)
Items Supplied Include:	Lock assembly, installation manual, quick reference guide, operations manual, installation template, cylinder, mounting hardware, and batteries

Certification and Testing

Accessibility Standard:	American with Disabilities Act (ADA)
Durability:	Designed and fully tested to meet rigid life cycle test and operating reliability per BHMA Grand 1 requirements.
Environmental:	Indoor/Outdoor Approved Front Housing : 31° F (-35° C) to +151° F (66° C

Warranty

Warranty:	3-year warranty from date of installation; built-in warranty counter in lock memory

Narrow Stile Lock

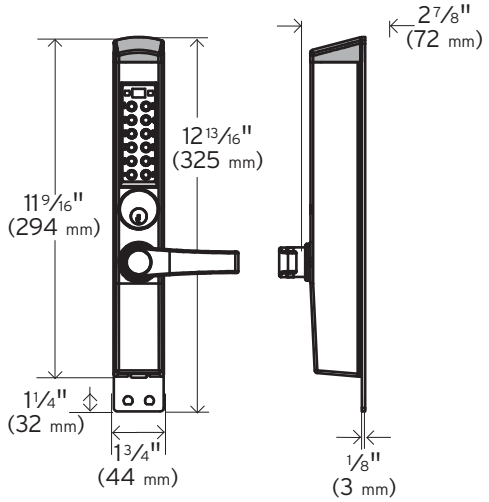

Exterior With Lever

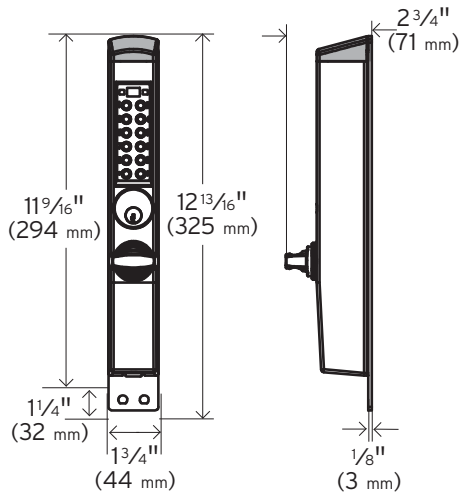

Exterior With Thumbturn

Optional Features

PC Software

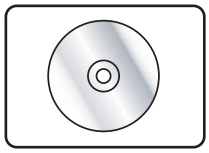

Remote Unlock

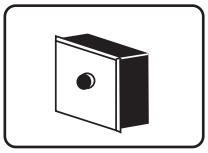

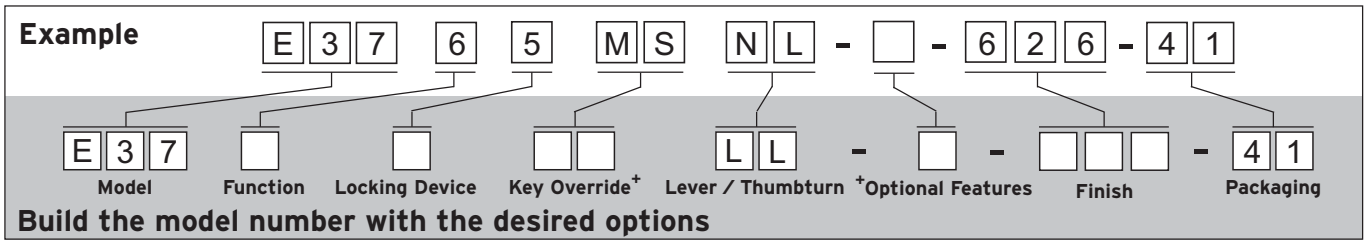

Base Model	Description	Base Price
E3765MSNL62641	E3700, Mortise, Deadlatch, Lever, Schlage “C” Keyway 300 Access Codes, 30,000 Audit Events	$950.00

Choose one option from each category

Function Options	Description	Price
6	Mortise (Adams Rite) Note: For Exit Device compatibility and adapter Kit, please see E-Plex 3x00 Series Accessories Section	No Charge

Locking Device Options	Description	Price
5	Mortise Dead Latch for Adams Rite 4070, 4510, 4520, 4530, 4710, 4720, 4730, 4900 and 4920AN. Also fits 8400 Mortise Exit	No Charge
6	Mortise Deadbolt for Adams Rite 1850, 1950, MS 1850S and MS 1950S	No Charge

Key Override Options	Description	Price
MS	Mortise, Kaba Cylinder (Schlage “C” Keyway) Included	No Charge
B	Mortise, I/C Housing, Best and Equivalents (6-pin Length); Cylinder not Included	No Charge

Lever/Thumbturn Options	Description	Price
NL	Narrow Stile Lever	No Charge
NT	Narrow Stile Thumbturn	No Charge

Optional Features	Description	Price
0	Remote Unlock—Lock supplied with pigtail ready to wire to remote momentary contact switch (not included)	Add $80.00

Finish Option	Description	Price
626	Satin Chrome (26D)	No Charge
744	Dark Bronze with Brass Accents (simulated 10B/613)	Add $100.00

Notes

E-Plex® 3700 Series Accessories (Optional)

Model Number	Description	Price
EP-EPRISE-xx-001 xx=version number. Please see kabaaccess.com/software to determine most current version number.	Enterprise Software Implementation Kit includes (See E-Plex Software section of this catalog for additional information)	$700.00
54561-000-41	USB PROX Reader/Enroller (Required with software above)	$440.00

E-Plex®
5000 Series

KABA®

- **PIN Access**
- **Electronic Pushbutton Lock**
- **100 Access Codes**
- **3,000 Audit Events**
- **Cylindrical, Mortise, and Exit Trim**
- **ANSI/BHMA Grade-1 Certified**

Features

Access Control:	Electronic pushbutton lock—eliminates problems and costs associated with issuing, controlling and collecting keys and cards. Provides exterior access by combination, while allowing free egress.
No Wires:	E-Plex's Patented LectroBolt™ eliminates running wires to or through the door—no risk of damage from pinched wires that can result in costly callbacks
Locking Device Options:	• Cylindrical: Cylindrical latch with 3-hour UL/ULC fire rating • Rim Exit Device: Compatible with most leading brands of Exit Devices (Exit Device and Mounting Hardware not included) • American Standard Mortise: With 1" (25 mm) and 1 ¼" (32 mm) faceplate; with and without deadbolt
Number of Codes:	Multiple Users—100 Codes; upgrades to 300 codes with optional software
Programming:	Locks are programmed via keypad or with optional Microsoft Excel based software—Simplifies management of doors and users as facility's number of users and access points grow
Handing:	Non-handed; pre-assembled for left hand door installations—easily changed in the field
Key Override:	Key-in-Lever/Knob cylinders, small format interchangeable cores, large format removable cores
Operation Modes:	• PIN access • Passage—can be toggled on/off or can be pre-programmed to re-lock after a certain number of hours • Lockout
Authority Levels:	Five different levels allow you to control who has access to specific lock functions, including: Service Codes—programmed for one-time access or "come-and-go" access for 1-to-24 hours
User Parameters:	Code length—Adjustable to accept 4 to 8 digits Anti-tamper lockout—Adjustable from 3 to 9 invalid attempts with an adjustable period of 0 to 90 seconds Re-lock time—Adjustable from 2 to 20 seconds
Battery Operation:	Batteries located in interior housing cover; offers quick and easy battery replacement for institutions (Four AA Alkaline batteries provide up to 180,000 cycles). Lock data is maintained if batteries fail.
Ease of Installation:	LectroBolt™ (patent pending) eliminates wiring to or through the door—no risk of pinched wires

Exit Device Compatibility:	Arrow S1250	Monarch 18R/F-18R	Sargent 8888
	Arrow S3800	Precision 21/FL 21	Von Duprin 22/22F
	Corbin Russwin 5200/5200A	Sargent 2828	Von Duprin 98/98F
	Detex 10/F10	Sargent 3828	Von Duprin 99/99F
	Dorma 9300/9300F	Sargent 8800	Yale 7100

- **Can not be used with Mortise design or most vertical rod Exit Devices**

ATTENTION: Compatibility is subject to change if modifications are made by Exit Device manufacturers without Kaba Access Control's knowledge.

Mechanical Features

Construction:	Extra heavy-duty Grade 1 lock; cylindrical lockset, solid cast housings; solid cast zinc levers, cylindrical drive wear tested for extensive use in indoor and outdoor applications
Numeric Keypad:	Vandal resistant, solid metal pushbuttons
Handing:	Non-handed; pre-assembled for left-hand door installation—easily changed in the field
Standard Finishes:	Satin Chrome 626 (26D) housings and levers, Black 676 housings with Satin Chrome 626 (26D) levers and accents
Optional Finishes:	Satin Brass 606 (04), Dark Bronze 744 with Brass Accents, Bright Brass 605 (03), and Bright Chrome 625 (026)
Backset:	**Cylindrical:** 2 ¾" (70 mm) backset, 2 ⅜" (60 mm) backset **Mortise**: 2 ¾" (70 mm) backset **Exit Trim Model:** Varies by exit device
Latches:	Cylindrical Models: ½" (13 mm) throw latch, ¾" (19 mm) throw latch (optional) Mortise Models: ¾" (19 mm) latch, 1" (25 mm) deadbolt (optional)
Minimum Stile Required:	5" (127 mm)
Weight:	Cylindrical and Mortise Models: 8 lbs (3.63 kg) Exit Trim Models: 10 lbs (4.54 kg)

Key Override

Key Override: Universal Key-in-Lever Cylinders: Includes Kaba 1599 6-pin cylinder (prepped to Kaba 90 or Schlage "C" Keyway, keyed different) and tailpieces for compatibility with:

Abloy 5277	Kaba Peaks 1099	Australian: Kaba experT 107K5 and Boyd KC286
Abloy 5477	Marks	
Arrow C100	Medeco 20W200H1	
ASSA 65611	Sargent 10 Line	
ASSA 65691	Schlage 23-001	European: Quattro S/Expert and AP2 (5 and 6-pin)
Corbin Russwin 2000-03	Schlage Primus 20-760	
Kaba 1539		
Kaba 1599		
Kaba Gemini 4730		

Interchangeable Cores: Small format—Best and equivalent (6 or 7-pin length)
Removable Cores: Large format—Medeco/ASSA/Yale (5 or 6-pin), Corbin Russwin, Schlage, and Sargent

Installation

Ease of Installation:	LectroBolt™ (patent pending) eliminates wiring to or through the door—no risk of pinched wires
Door Preparation:	Easily installs on wood or metal doors; Four bolt installation; No wiring

E-Plex®

5000 Series

KABA®

Door Thickness:	Cylindrical Model: 1 3/8" (35 mm) to 2 1/4" (57 mm); pre-assembled to accommodate doors 1 5/8" (41 mm) to 2" (51 mm); hardware kits included for thin and thick doors
Exit Trim and Mortise Models:	1 3/4" (44 mm) to 2 1/4" (57 mm). Pre-assembled to accommodate doors 1 3/4" (44 mm) to 2 1/8" (54 mm)
Items Supplied Include:	Installation manual, quick reference guide, operations manual, full-scale template, required installation hardware, and tailpiece for specified key override
Additional Items Supplied with Key-in-Lever cylinder model only:	Includes Universal Kaba 1599 6-pin cylinder with tailpiece, four additional tailpieces, two nickel silver keys, and spare cylinder retainer

Electronic Features

Battery:	Batteries located in interior housing; provides quick and easy battery replacement for institutions; Four AA batteries provide up to 180,000 cycles
Indicators:	Audible and visual indicators; low battery visual indicator
Audit Capability:	3,000 Events; upgrades to 9,000 events with optional software

Certification and Testing

Accessibility Standard:	Americans with Disabilities Act (ADA)
Fire Rating:	3-hour, UL/ULC fire door rating for "A" labeled doors
Durability:	ANSI/BHMA Grade 1 certified (A156.25, A156.2, A156.13, A156.3)
Environmental:	Indoor/Outdoor Approved Front Housing: -31° F (-35° C) to + 151° F (66° C) Rear Housing: -31° F (-35° C) to + 130° F (55° C)

Warranty

Warranty:	3-year warranty from date of installation; built-in warranty counter in lock memory

Cylindrical

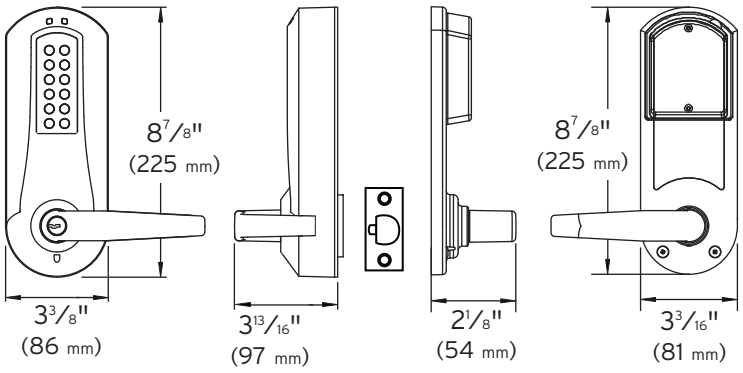

Exterior **Interior**

Optional Features

Knob

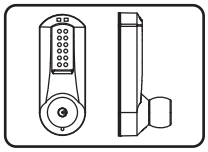

Remote Unlock

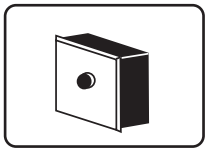

PC Software

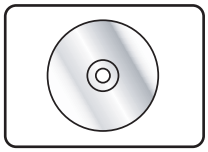

Mortise

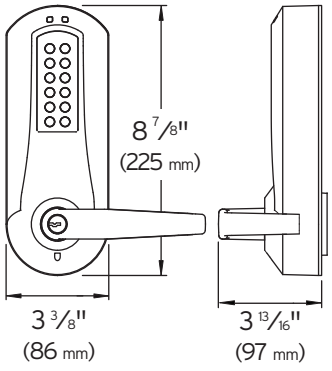

Exterior

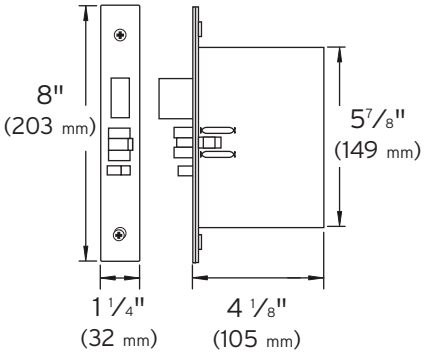

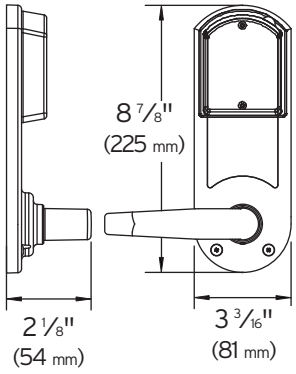

Interior

Optional Features

Deadbolt

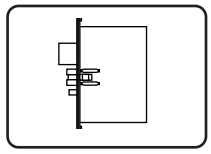

No Deadbolt

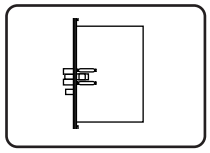

Remote Unlock

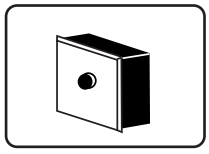

PC Software

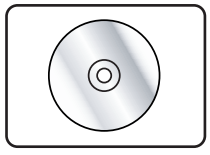

Exit Trim

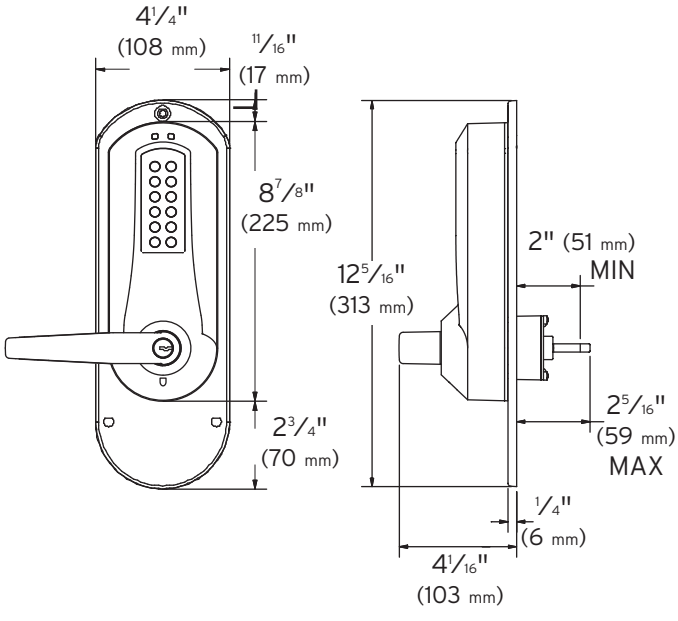

Exterior

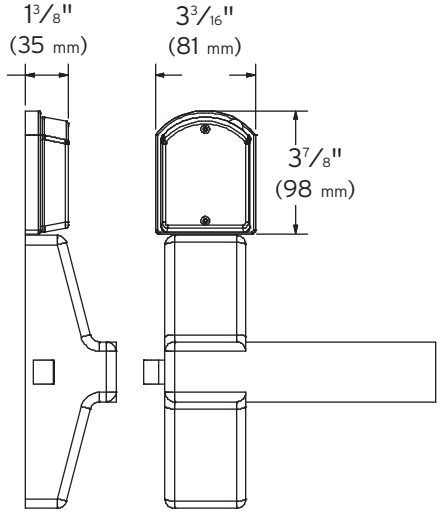

Interior

Optional Features

PC Software

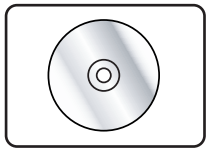

E-Plex®

5000 Series

KABA®

Example E 5 0 | 3 | 1 | X K | W L - ☐ - 6 2 6 - 4 1

E 5 0	☐	☐	☐☐	☐☐	- ☐ -	☐☐☐	- 4 1
Model	Function	Locking Device	Key Override+	Lever / Knob	+Optional Features	Finish	Packaging

Build the model number with the desired options

Base Model	Description	Base Price
E5031XKWL62641	E5000, Cylindrical, Key-in-Lever, 100 Access Codes	$700.00

Choose one option from each category

Function Options	Description	Price
1++	Exit Trim (E.T.)	Add $100.00
3	Cylindrical Lock (cyl)	No Charge
5	Cylindrical with Privacy (cyl)	Add $100.00
6	American Steel Mortise (ASM)	Add $120.00

Locking Device Options	Description	Price
0++	Exit Trim (available with E.T. only)	No Charge
1	Cylindrical ½" (13 mm) throw latch, floating face plate 2 ¾" (70 mm) backset	No Charge
2	Cylindrical ½" (13 mm) throw latch, floating face plate 2 ⅜" (60 mm) backset	No Charge
5	Cylindrical ¾" (19 mm) throw latch, beveled face plate 2 ¾" (70 mm) backset	No Charge
3	Mortise LH—1" (25 mm) Face Plate No Deadbolt	No Charge
4	Mortise RH—1" (25 mm) Face Plate No Deadbolt	No Charge
8	Mortise LH—1" (25 mm) Face Plate With Deadbolt	Add $30.00
9	Mortise RH—1" (25 mm) Face Plate With Deadbolt	Add $30.00
6	STD Mortise 1¼" Face Plate No Deadbolt (Non-Handed)	No Charge
7	STD Mortise 1¼" Face Plate With Deadbolt (Non-Handed)	Add $30.00

Key Override Options+++	Description		Price
XK	K-I-L	Kaba Cylinder (Kaba 90 Keyway) Included	No Charge
XS	K-I-L	Kaba Cylinder (Schlage “C” Keyway) Included	No Charge
B	I/C	Best and Equivalents (6 or 7-pin Length)	No Charge
C	R/C	Corbin Russwin	No Charge
M	R/C	Medeco/ASSA/Yale (5 or 6-pin Length)	No Charge
R	R/C	Sargent	No Charge
S	R/C	Schlage	No Charge

Lever/Knob Options	Description	Price
WL	Winston Lever	No Charge
WK	Winston Knob (available with Cylindrical only)	No Charge

Optional Features+	Description	Price
0	Remote Unlock (Not available with Exit Trim Models) Lock supplied with pigtail ready to wire remote momentary contact switch (not included)	Add $80.00

Finish Options	Description	Price
605	Bright Brass (03)	Add $25.00
606	Satin Brass (04)	Add $25.00
625	Bright Chrome (026)	Add $25.00
626	Satin Chrome (26D)	No Charge
676	Black with Satin Chrome Accents	No Charge
744	Dark Bronze with Brass Accents (Simulated 10B/613)	Add $100.00

Notes

Software Optional	Description	Price
EP-STD-xx-001 xx=version number. Please see kabaaccess.com/software to determine most current version number.	E-Plex 3000/5000 Standard Software Implementation Kit (Excel-Based Templates)–300 Users (See E-Plex Software section of this catalog for additional information)	$500.00

+ Optional Features

This field may be left blank if no optional features are required

++ Exit Device Compatibility

Arrow S1250	Monarch 18R / F-18R	Sargent 8888
Arrow S3800	Precision 21 / FL 21	Von Duprin 22 / 22F
Corbin Russwin 5200 / 5200A	Sargent 2828	Von Duprin 98 / 98F
Detex 10 / F10	Sargent 3828	Von Duprin 99 / 99F
Dorma 9300 / 9300F	Sargent 8800	Yale 7100

- **Cannot be used with mortise design or most vertical rod Exit Devices**

ATTENTION: Compatibility is subject to change if modifications are made by Exit Device manufacturers without Kaba Access Control's knowledge

+++ Interchangeable/Removable core cylinders are not included with the lock

Items Supplied with the Lock

- Installation Manual
- Quick Reference Guide
- Operations Manual
- Full-Scale Template
- Required Installation Hardware
- Tailpiece for Specified Key Override

Additional Items Supplied with Key-in-Lever Models Only

- Universal Kaba High Security 1599 6-pin cylinder with tailpiece (includes two nickel silver keys)
- Four additional tailpieces (can be used with many of the leading conventional cylinders)

E-Plex®

5070 Stand-Alone Access Controller

- **PIN Access**
- **Vandal Resistant**
- **Solid Cast Housing**
- **100 Access Codes**
- **3,000 Audit Events**
- **Works with Most Electronic Door Hardware**

Features

Access Control:	Electronic push-button solution for dual-swing doors, parking gates, glass doors, etc., featuring online-type functionality in a stand-alone, easy to install reader housing with keypad—eliminates problems and costs associated with issuing, controlling and collecting keys and cards. Provides exterior access control for multiple users using specific PINs (Personal Identification Numbers).
Number of Codes:	Multiple Users—100 Codes; upgrades to 300 codes with optional software
Programming:	Readers are programmed via keypad or with optional Microsoft Excel based software—Simplifies management of doors and users as facility's number of users and access points grow
Operation Modes:	• PIN access • Passage—can be toggled on/off or can be pre-programmed to re-lock after a certain number of hours • Lockout
Authority Levels:	Five different levels allow you to control who has access to specific lock functions, including: Service Codes—programmed for one-time access or "come-and-go" access for 1-to-24 hours
User Parameters:	Code length—Adjustable to accept 4 to 8 digits Anti-tamper lockout—Adjustable from 3 to 9 invalid attempts with an adjustable period of 0 to 90 seconds Re-lock time—Adjustable from 2 to 20 seconds
Power:	Requires 12-24Vdc power input from standard, off-the-shelf power interface units. If power is lost, user data and lock parameters are retained in on-board memory.
Ease of Installation:	Simple, easy to install reader unit is predrilled for single gang box or wall mounting. Lockable interface controller unit enclosure is predrilled and has knockouts for simple wiring with low voltage connections directly into off-the-shelf power interface units. Product also includes a contact closure, alarm shunt output to interface with new or existing fire alarms and security systems.
Vandal Resistance:	Exclusive tamper-switch circuitry in reader housing prevents unauthorized access if unit is attacked or removed from mounting plate. If tamper is detected, the reader unit emits constant bright blue lights and all internal wires other than power are passive until unit is reset. Once reader unit is later reinstalled and/or remotely reset, PIN access is restored.

Mechanical Features

Construction:	Solid cast housing
Numeric Keypad:	Vandal resistant, solid metal pushbuttons
Standard Finishes:	Satin Chrome 626 (26D) housings, Black 676 housings with Satin Chrome 626 (26D) Buttons
Optional Finishes:	Satin Brass 606 (04), Dark Bronze 744 with Brass Buttons Bright Brass 605 (03), and Bright Chrome 625 (026)
Weight:	5.26 lbs. (2.38 kg)

Installation

Ease of Installation:	Simple, easy to install reader unit is predrilled for single gang box or wall mounting. Lockable interface controller unit enclosure is predrilled and has knockouts for simple wiring with low voltage connections directly into off-the-shelf power interface units. Product also includes a contact closure, alarm shunt output to interface with new or existing fire alarms and security systems.
Items Supplied Include:	Installation manual, quick reference guide, operations manual, full-scale template, and required installation hardware

Electronic Features

Vandal Resistance:	Exclusive tamper-switch circuitry in reader housing prevents unauthorized access if unit is attacked or removed from mounting plate. If tamper is detected, the reader unit emits constant bright blue lights and all internal wires other than power are passive until unit is reset. Once reader unit is later reinstalled and/or remotely reset, PIN access is restored.
Indicators:	Audible and visual indicators; visual tamper indicator
Audit Capability:	3,000 Events; upgrades to 9,000 events with optional software

Environmental

Operating Range:	-31° F (-35° C) to 151° F (66° C)

Warranty

Warranty:	3-year warranty from date of installation; built-in warranty counter in memory

Stand-Alone Access Controller

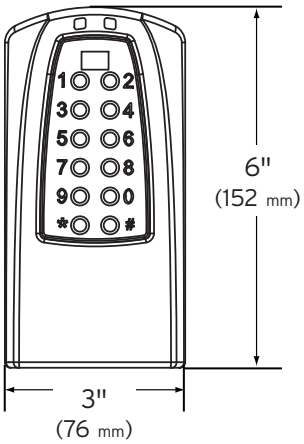

Exterior

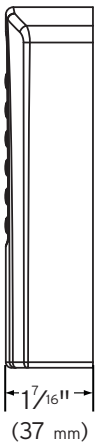

Side View

Optional Features

PC Software

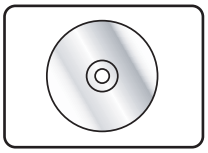

E-Plex®

5070 Stand-Alone Access Controller

Example E 5 0 7 0 - 6 2 6 - 4 1

E 5 0 — Model; 7 — Function; 0 — Locking Device; □ □ □ — Finish; 4 1 — Packaging

Build the model number with the desired options

Base Model	Description	Base Price
E507062641	E5070, Stand-Alone Access Controller, 100 Access Codes, 3,000 Audit Events	$690.00

Choose one option from each category

Function Options	Description	Price
7	Stand-Alone Access Controller	No Charge

Locking Device Options	Description	Price
0	No Locking Device	No Charge

Finish Options	Description	Price
605	Bright Brass (03)	Add $25.00
606	Satin Brass (04)	Add $25.00
625	Bright Chrome (026)	Add $25.00
626	Satin Chrome (26D)	No Charge
676	Black with Satin Chrome Accents	No Charge
744	Dark Bronze with Brass Accents (simulated 10B/613)	Add $100.00

Notes

Software Optional	Description	Price
EP-STD-xx-001	E-Plex 3000/5000 Standard Software Implementation Kit (Excel-Based Templates)—300 Users (See E-Plex Software section of this catalog for additional information)	$500.00

xx=version number.
Please see kabaaccess.com/software to determine most current version number.

Items Supplied with the Unit

- Installation Manual
- Quick Reference Guide
- Full-Scale Template
- Required Installation Hardware

KABA®

E-Plex®
5086 Series

- **PIN Access for Entry and Egress**
- **Electronic Pushbutton Lock**
- **100 Access Codes**
- **3,000 Audit Events**
- **Optional Software**

Features

Access Control:	Electronic pushbutton lock—eliminates problems and costs associated with issuing, controlling and collecting keys and cards. Provides interior and exterior access by combination.
Locking Device Options:	American Standard Mortise: With 1 ¼" (32 mm) faceplate; without deadbolt
Number of Codes:	Multiple Users—100 Codes; upgrades to 300 codes with optional software
Programming:	Locks are programmed via keypad or with optional Microsoft Excel based software—Simplifies management of doors and users as facility's number of users and access points grow
Handing:	Non-handed, pre-assembled for left hand door installations—easily changed in the field
Key Override:	Key-in-Lever/Knob cylinders, small format interchangeable cores, large format removable cores
Operation Modes	• Single credential—access • Single credential—egress
Authority Levels:	Five different levels allow you to control who has access to specific lock functions, including: Service Codes—programmed for one-time access or "come-and-go" access for 1-to-24 hours
User Parameters:	Code length—Adjustable to accept 4 to 8 digits Anti-tamper lockout—Adjustable from 3 to 9 invalid attempts with an adjustable period of 0 to 90 seconds Re-lock time—Adjustable from 2 to 20 seconds
Battery Operation:	Batteries located in mortise housing; offers quick and easy battery replacement for institutions (Four AA Alkaline batteries provide up to 180,000 cycles). Lock data is maintained if batteries fail.

Mechanical Features

Construction:	Extra heavy-duty Grade 1 lock; solid cast housings; solid cast zinc levers, tested for extensive use in indoor and outdoor applications
Numeric Keypad:	Vandal resistant, solid metal pushbuttons

E-Plex®
5086 Series

Handing:	Non-handed; pre-assembled for left-hand door installation—easily changed in the field
Standard Finishes:	Satin Chrome 626 (26D) housings and levers, Black 676 housings with Satin Chrome 626 (26D) levers and accents
Optional Finishes:	Satin Brass 606 (04), Dark Bronze 744 with Brass Accents, Bright Brass 605 (03), and Bright Chrome 625 (026)
Backset:	Mortise: 2 ¾" (70 mm) backset
Latches:	¾" (19 mm) latch
Minimum Stile Required:	5" (127 mm)
Weight:	8 lbs (3.63 kg)

Key Override

Key Override:	Universal Key-in-Lever Cylinders: Includes Kaba 1599 6-pin cylinder (prepped to Kaba 90 or Schlage "C" Keyway, keyed different) and tailpieces for compatibility with: Abloy 5277 Abloy 5477 Arrow C100 ASSA 65611 ASSA 65691 Corbin Russwin 2000-03 Kaba 1539 Kaba 1599 Kaba Gemini 4730 Kaba Peaks 1099 Marks Medeco 20W200H1 Sargent 10 Line Schlage 23-001 Schlage Primus 20-760 Australian: Kaba experT 107K5 and Boyd KC286 European: Quattro S/Expert and AP2 (5 and 6-pin) Interchangeable Cores: Small format—Best and equivalent (6 or 7-pin length) Removable Cores: Large format—Medeco/ASSA/Yale (5 or 6-pin), Corbin Russwin, Schlage, and Sargent

Installation

Ease of Installation:	Utilizes existing mortise prep for simple installation
Door Preparation:	Easily installs on wood or metal doors; Four bolt installation; No wiring
Door Thickness:	1 ¾" (44 mm) to 2 ¼" (57 mm). Pre-assembled to accommodate doors 1 ¾" (44 mm) to 2 ⅛" (54 mm)
Items Supplied Include:	Installation manual, quick reference guide, operations manual, full-scale template, required installation hardware, and tailpiece for specified key override
Additional Items Supplied with Key-in-Lever cylinder model only:	Includes two Universal Kaba 1599 6-pin cylinder with tailpiece, four additional tail pieces, two nickel silver keys, and spare cylinder retainer

Electronic Features

Battery:	Batteries located in mortise housing; provides quick and easy battery replacement for institutions; Four AA batteries provide up to 180,000 cycles
Indicators:	Audible and visual indicators; low battery visual indicator
Audit Capability:	3,000 Events; upgrades to 9,000 events with optional software

Certification and Testing

Accessibility Standard:	Americans with Disabilities Act (ADA)
Fire Rating:	3-hour, UL/ULC fire door rating for "A" labeled doors
Durability:	ANSI/BHMA Grade 1 Certified for Mortise Electronic Locks (A156.13 and A156.25)
Environmental:	Indoor/Outdoor Approved Front Housing: -31° F (-35° C) to + 151° F (66° C)

Warranty

Warranty:	1-year warranty from date of installation; built-in warranty counter in lock memory

Mortise

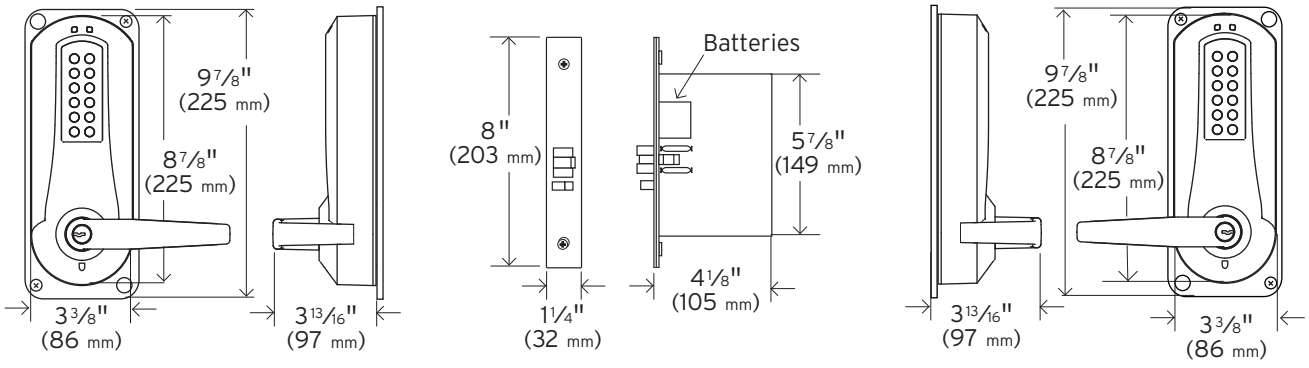

Exterior **Interior**

Optional Features

PC Software

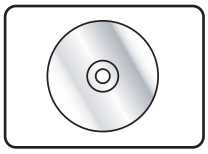

E-Plex®

5086 Series

KABA®

Example E 5 0 | 8 | 6 | X K | W L - 6 2 6 - 4 1

Model	Function	Locking Device	Key Override+	Lever / Knob		Finish	Packaging
E 5 0	8	6			-		- 4 1

Build the model number with the desired options

Base Model	Description	Base Price
E5086XKWL62641	E5086, Entry/Egress (Back-to-Back), 100 Access Codes	$1,300.00

Choose one option from each category

Function Options	Description	Price
8	American Steel Mortise (ASM), Entry/Egress	No Charge

Locking Device Options +	Description	Price
6	Mortise 1¼" Face Plate No Deadbolt (Non-Handed)	No Charge

Key Override Options +, ++	Description		Price
XK	K-I-L	Kaba Cylinder (Kaba 90 Keyway) Included	No Charge
XS	K-I-L	Kaba Cylinder (Schlage "C" Keyway) Included	No Charge
B	I/C	Best and Equivalents (6 or 7-pin Length)	No Charge
C	R/C	Corbin Russwin	No Charge
M	R/C	Medeco/ASSA/Yale (5 or 6-pin Length)	No Charge
R	R/C	Sargent	No Charge
S	R/C	Schlage	No Charge

Lever/Knob Options	Description	Price
WL	Winston Lever	No Charge

Finish Options +	Description	Price
605	Bright Brass (03)	Add $50.00
606	Satin Brass (04)	Add $50.00
625	Bright Chrome (026)	Add $50.00
626	Satin Chrome (26D)	No Charge
676	Black with Satin Chrome Accents	No Charge
744	Dark Bronze with Brass Accents (simulated 10B/613)	Add $100.00

Notes

Software Optional	Description	Price
EP-STD-xx-001 xx=version number. Please see kabaaccess.com/software to determine most current version number.	E-Plex 3000/5000 Standard Software Implementation Kit (Excel-Based Templates)–300 Users (See E-Plex Software section of this catalog for additional information)	$500.00

+ Options must be the same for both sides of the lock

++ Interchangeable/Removable core cylinders are not included with the lock

Items Supplied with the Lock

- Installation Manual
- Quick Reference Guide
- Operations Manual
- Full-Scale Template
- Required Installation Hardware
- Tailpiece for Specified Key Override

Additional Items Supplied with Key-in-Lever Models Only

- Universal Kaba High Security 1599 6-pin cylinder with tailpiece (includes two nickel silver keys)—per side
- Four additional tailpieces (can be used with many of the leading conventional cylinders)—per side

E-Plex®

5200 Series

KABA®

- **PIN Access**
- **Electronic Access Control**
- **3,000 Access Codes**
- **30,000 Audit Events**
- **Access Schedules**
- **ANSI/BHMA Grade-1 Certified**

Features

Access Control:	Electronic pushbutton lock—eliminates problems and costs associated with issuing, controlling and collecting keys and cards. Provides exterior access by combination, while allowing free egress.
No Wires:	E-Plex's Patented LectroBolt™ eliminates running wires to or through the door—no risk of damage from pinched wires that can result in costly callbacks
Locking Device Options:	• Cylindrical: Cylindrical latch with 3-hour UL/ULC fire rating • Rim Exit Device: Compatible with most leading brands of Exit Devices (Exit Device and Mounting Hardware not included) • American Standard Mortise: With 1" (25 mm) and 1 ¼" (32 mm) faceplate; with and without deadbolt
Number of Codes:	Multiple Users—3,000 Codes; over 100 million possible code combinations
Programming:	Locks are programmed via E-Plex Enterprise Software (not included)—provides easy management of doors and users
Handing:	Non-handed, pre-assembled for left hand door installations—easily changed in the field
Key Override:	Key-in-Lever/Knob cylinders, small format interchangeable cores, large format removable cores
Scheduling:	Access schedules—Up to 16 different access schedules may be programmed into lock Holiday/Vacation—Up to 32 different holiday/vacation blocks may be programmed into lock
Operation Modes:	• PIN access • Passage—can be toggled on/off or can be pre-programmed to re-lock after a certain number of hours • Lockout
Authority Levels:	Five different levels allow you to control who has access to specific lock functions, including: Service Codes—programmed for one-time access or "come-and-go" access for 1-to-24 hours
User Parameters:	Code length—Adjustable to accept 4 to 8 digits Anti-tamper lockout—Adjustable from 3 to 9 invalid attempts with an adjustable period of 0 to 90 seconds Re-lock time—Adjustable from 2 to 20 seconds
Battery Operation:	Batteries located in interior housing cover; offers quick and easy battery replacement for institutions (Four AA Alkaline batteries provide up to 180,000 cycles). Lock data is maintained if batteries fail.
Ease of Installation:	LectroBolt™ (patent pending) eliminates wiring to or through the door—no risk of pinched wires

Exit Device Compatibility:	Arrow S1250	Monarch 18R/F-18R	Sargent 8888
	Arrow S3800	Precision 21/FL 21	Von Duprin 22/22F
	Corbin Russwin 5200/5200A	Sargent 2828	Von Duprin 98/98F
	Detex 10/F10	Sargent 3828	Von Duprin 99/99F
	Dorma 9300/9300F	Sargent 8800	Yale 7100

- **Cannot be used with Mortise design or most vertical rod Exit Devices**

ATTENTION: Compatibility is subject to change if modifications are made by Exit Device manufacturers without Kaba Access Control's knowledge

Mechanical Features

Construction:	Extra heavy-duty Grade 1 lock; cylindrical lockset, solid cast housings; solid cast zinc levers, cylindrical drive wear tested for extensive use in indoor and outdoor applications
Numeric Keypad:	Vandal resistant, solid metal pushbuttons
Handing:	Non-handed, pre-assembled for left-hand door installation—easily changed in the field
Standard Finishes:	Satin Chrome 626 (26D) housings and levers
,	Black 676 housings with Satin Chrome 626 (26D) levers and accents
Optional Finishes:	Satin Brass 606 (04), Dark Bronze 744 with Brass Accents, Bright Brass 605 (03), and Bright Chrome 625 (026)
Backset:	**Cylindrical:** 2 ¾" (70 mm) backset, 2 ⅜" (60 mm) backset **Mortise:** 2 ¾" (70 mm) backset **Exit Trim Model:** Varies by exit device
Latches:	Cylindrical Models: ½" (13 mm) throw latch, ¾" (19 mm) throw latch (optional) Mortise Models: ¾" (19 mm) latch, 1" (25 mm) deadbolt (optional)
Minimum Stile Required:	5" (127 mm)
Weight:	Cylindrical and Mortise Models: 8 lbs (3.63 kg) Exit Trim Models: 10 lbs (4.54 kg)

Key Override

Key Override: Universal Key-in-Lever Cylinders: Includes Kaba 1599 6-pin cylinder (prepped to Kaba 90 or Schlage "C" Keyway, keyed different) and tailpieces for compatibility with:

Abloy 5277	Kaba Gemini 4730	Australian:
Abloy 5477	Kaba Peaks 1099	Kaba experT 107K5
Arrow C100	Marks	and Boyd KC286
ASSA 65611	Medeco 20W200H1	
ASSA 65691	Sargent 10 Line	European: Quattro
Corbin Russwin 2000-03	Schlage 23-001	S/Expert and AP2
Kaba 1539	Schlage Primus 20-760	(5 and 6-pin)
Kaba 1599		

Interchangeable Cores: Small format—Best and equivalent (6 or 7-pin length)
Removable Cores: Large format—Medeco/ASSA/Yale (5 or 6-pin), Corbin Russwin, Schlage, and Sargent

E-Plex®
5200 Series

KABA®

Installation

Ease of Installation:	LectroBolt™ (patent pending) eliminates wiring to or through the door—no risk of pinched wires
Door Preparation:	Easily installs on wood or metal doors; Four bolt installation; No wiring
Door Thickness:	Cylindrical Model: 1 3/8" (35 mm) to 2 1/4" (57 mm); pre-assembled to accommodate doors 1 5/8" (41 mm) to 2" (51 mm); hardware kits included for thin and thick doors
Exit Trim and Mortise Models:	1 3/4" (44 mm) to 2 1/4" (57 mm). Pre-assembled to accommodate doors 1 3/4" (44 mm) to 2 1/8" (54 mm)
Items Supplied Include:	Installation manual, quick reference guide, operations manual, full-scale template, required installation hardware, and tailpiece for specified key override
Additional Items Supplied with Key-in-Lever cylinder model only:	Includes Universal Kaba 1599 6-pin cylinder with tailpiece, four additional tailpieces, two nickel silver keys, and spare cylinder retainer

Electronic Features

Battery:	Batteries located in interior housing; provides quick and easy battery replacement for institutions; Four AA batteries provide up to 180,000 cycles
Indicators:	Audible and visual indicators; low battery visual indicator
Audit Capability:	30,000 Events
Access Schedules:	Up to 32 holiday and vacation blocks and 16 access schedules

Certification and Testing

Accessibility Standard:	Americans with Disabilities Act (ADA)
Fire Rating:	3-hour, UL/ULC fire door rating for "A" labeled doors
Durability:	ANSI/BHMA Grade 1 certified (A156.25, A156.2, A156.13, A156.3)
Environmental:	Indoor/Outdoor Approved Front Housing: -31° F (-35° C) to + 151° F (66° C) Rear Housing: -31° F (-35° C) to + 130° F (55° C)

Warranty

Warranty:	3-year warranty from date of installation; built-in warranty counter in lock memory

Cylindrical

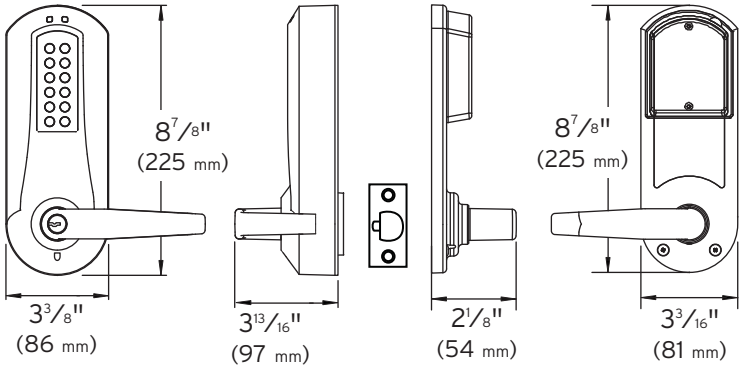

Exterior **Interior**

Optional Features

Knob

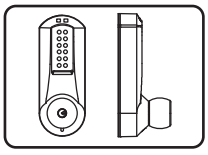

Remote Unlock

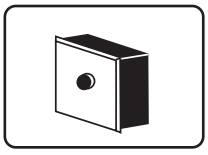

Mortise

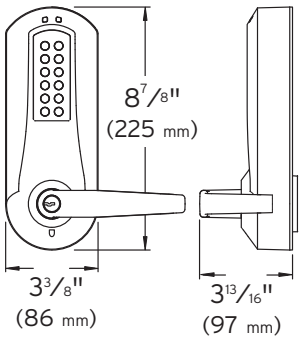

Exterior

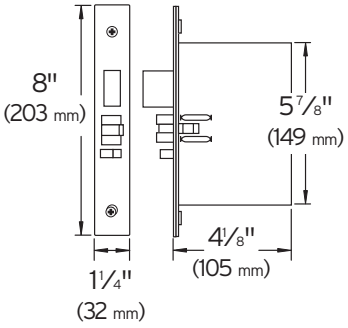

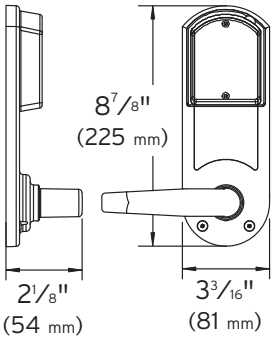

Interior

Optional Features

Deadbolt

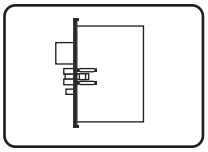

Remote Unlock

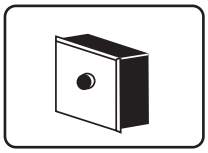

No Deadbolt

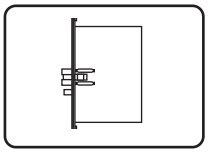

Exit Trim

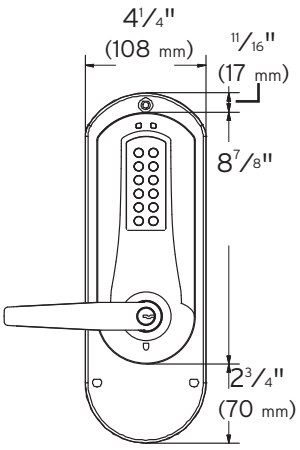

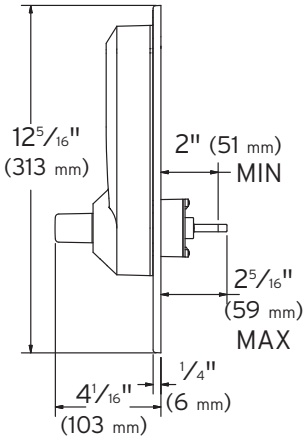

Exterior

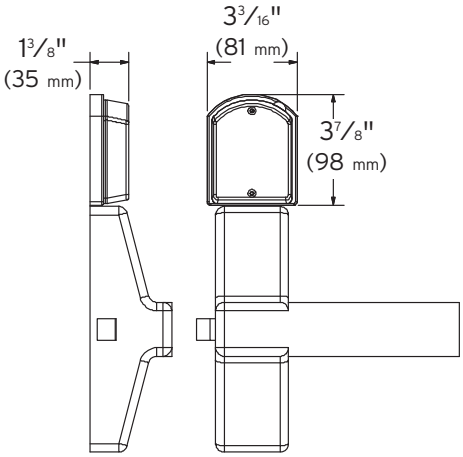

Interior

Required Features

PC Software

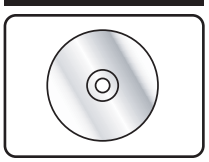

E-Plex®

5200 Series

KABA®

Example E 5 2 3 1 X K W L - ☐ - 6 2 6 - 4 1

E 5 2	☐	☐	☐☐	☐☐	-	☐	-	☐☐☐	-	4 1
Model	Function	Locking Device	Key Override	Lever / Knob		+Optional Features		Finish		Packaging

Build the model number with the desired options

Base Model	Description	Base Price
E5231XKWL62641	E5200, Cylindrical, Key-in-Lever, 3,000 Access Codes	$825.00

Choose one option from each category

Function Options	Description	Price
1++	Exit Trim (E.T.)	Add $100.00
3	Cylindrical Lock (cyl)	No Charge
5	Cylindrical with Privacy (cyl)	Add $100.00
6	American Steel Mortise (ASM)	Add $120.00

Locking Device Options	Description	Price
0++	Exit Trim (available with E.T. only)	No Charge
1	Cylindrical ½" (13 mm) throw latch, floating face plate 2 ¾" (70 mm) backset	No Charge
2	Cylindrical ½" (13 mm) throw latch, floating face plate 2 ⅜" (60 mm) backset	No Charge
5	Cylindrical ¾" (19 mm) throw latch, beveled face plate 2 ¾" (70 mm) backset	No Charge
3	Mortise LH–1" (25 mm) Face Plate No Deadbolt	No Charge
4	Mortise RH–1" (25 mm) Face Plate No Deadbolt	No Charge
8	Mortise LH–1" (25 mm) Face Plate With Deadbolt	Add $30.00
9	Mortise RH–1" (25 mm) Face Plate With Deadbolt	Add $30.00
6	STD Mortise 1¼" Face Plate No Deadbolt (Non-Handed)	No Charge
7	STD Mortise 1¼" Face Plate With Deadbolt (Non-Handed)	Add $30.00

Key Override Options+++	Description		Price
XK	K-I-L	Kaba Cylinder (Kaba 90 Keyway) Included	No Charge
XS	K-I-L	Kaba Cylinder (Schlage “C” Keyway) Included	No Charge
B	I/C	Best and Equivalents (6 or 7-pin Length)	No Charge
C	R/C	Corbin Russwin	No Charge
M	R/C	Medeco/ASSA/Yale (5 or 6-pin Length)	No Charge
R	R/C	Sargent	No Charge
S	R/C	Schlage	No Charge

Lever/Knob Options	Description	Price
WL	Winston Lever	No Charge
WK	Winston Knob (available with Cylindrical only)	No Charge

Optional Features+	Description	Price
0	Remote Unlock (Not available with Exit Trim Models) Lock supplied with pigtail ready to wire remote momentary contact switch (not included)	Add $80.00

Finish Options	Description	Price
605	Bright Brass (03)	Add $25.00
606	Satin Brass (04)	Add $25.00
625	Bright Chrome (026)	Add $25.00
626	Satin Chrome (26D)	No Charge
676	Black with Satin Chrome Accents	No Charge
744	Dark Bronze with Brass Accents (Simulated 10B/613)	Add $100.00

Notes

E-Plex® 5200 Series Accessories (Required)

Model Number	Description	Price
EP-EPRISE-xx-001 xx=version number. Please see kabaaccess.com/software to determine most current version number.	Enterprise Software Implementation Kit (See E-Plex Software section of this catalog for additional information)	$700.00

+ Optional Features
This field may be left blank if no optional features are required

++ Exit Device Compatibility

Arrow S1250	Monarch 18R / F-18R	Sargent 8888
Arrow S3800	Precision 21 / FL 21	Von Duprin 22 / 22F
Corbin Russwin 5200 / 5200A	Sargent 2828	Von Duprin 98 / 98F
Detex 10 / F10	Sargent 3828	Von Duprin 99 / 99F
Dorma 9300 / 9300F	Sargent 8800	Yale 7100

• Cannot be used with mortise design or most vertical rod Exit Devices

ATTENTION: Compatibility is subject to change if modifications are made by Exit Device manufacturers without Kaba Access Control's knowledge

+++ Interchangeable/Removable core cylinders are not included with the lock

Items Supplied with the Lock

- Installation Manual
- Quick Reference Guide
- Operations Manual
- Full-Scale Template
- Required Installation Hardware
- Tailpiece for Specified Key Override

Additional Items Supplied with Key-in-Lever Models Only

- Universal Kaba High Security 1599 6-pin cylinder with tailpiece (includes two nickel silver keys)
- Four additional tailpieces (can be used with many of the leading conventional cylinders)

E-Plex®

5270 Stand-Alone Access Controller

- **PIN Access**
- **Vandal Resistant**
- **Solid Cast Housing**
- **3,000 Access Codes**
- **30,000 Audit Events**
- **Works with Most Electronic Door Hardware**

Features

Access Control:	Electronic push-button solution for dual-swing doors, parking gates, glass doors, etc., featuring online-type functionality in a stand-alone, easy to install reader housing with keypad—eliminates problems and costs associated with issuing, controlling and collecting keys and cards. Provides exterior access control for multiple users using specific PINs (Personal Identification Numbers).
Number of Codes:	Multiple Users—3,000 Codes; over 100 million possible code combinations
Programming:	Readers are programmed via E-Plex Enterprise Software (not included)—provides easy management of doors and users
Scheduling:	Access schedules—Up to 16 different access schedules may be programmed into reader Holiday/Vacation—Up to 32 different holiday/vacation blocks may be programmed into reader
Operation Modes:	• PIN access • Passage—can be toggled on/off or can be pre-programmed to re-lock after a certain number of hours • Lockout
Authority Levels:	Five different levels allow you to control who has access to specific lock functions, including: Service Codes—programmed for one-time access or "come-and-go" access for 1-to-24 hours
User Parameters:	Code length—Adjustable to accept 4 to 8 digits Anti-tamper lockout—Adjustable from 3 to 9 invalid attempts with an adjustable period of 0 to 90 seconds Re-lock time—Adjustable from 2 to 20 seconds
Power:	Requires 12–24Vdc power input from standard, off-the-shelf power interface units. If power is lost, user data and lock parameters are retained in on-board memory.
Ease of Installation:	Simple, easy to install reader unit is predrilled for single gang box or wall mounting. Lockable interface controller unit enclosure is predrilled and has knockouts for simple wiring with low voltage connections directly into off-the-shelf power interface units. Product also includes a contact closure, alarm shunt output to interface with new or existing fire alarms and security systems.
Vandal Resistance:	Exclusive tamper-switch circuitry in reader housing prevents unauthorized access if unit is attacked or removed from mounting plate. If tamper is detected, the reader unit emits constant bright blue lights and all internal wires other than power are passive until unit is reset. Once reader unit is later reinstalled and/or remotely reset, PIN access is restored.

Mechanical Features

Construction:	Solid cast housing
Numeric Keypad:	Vandal resistant, solid metal pushbuttons
Standard Finishes:	Satin Chrome 626 (26D) housings, Black 676 housings with Satin Chrome (626) Buttons
Optional Finishes:	Satin Brass 606 (04), Dark Bronze 744 with Brass Buttons, Bright Brass 605 (03), and Bright Chrome 625 (026)
Weight:	5.26 lbs. (2.38 kg)

Installation

Ease of Installation:	Simple, easy to install reader unit is predrilled for single gang box or wall mounting. Lockable interface controller unit enclosure is predrilled and has knockouts for simple wiring with low voltage connections directly into off-the-shelf power interface units. Product also includes a contact closure, alarm shunt output to interface with new or existing fire alarms and security systems.
Items Supplied Include:	Installation manual, quick reference guide, operations manual, full-scale template, and required installation hardware

Electronic Features

Vandal Resistance:	Exclusive tamper-switch circuitry in reader housing prevents unauthorized access if unit is attacked or removed from mounting plate. If tamper is detected, the reader unit emits constant bright blue lights and all internal wires other than power are passive until unit is reset. Once reader unit is later reinstalled and/or remotely reset, PIN access is restored.
Indicators:	Audible and visual indicators; visual tamper indicator
Audit Capability:	30,000 Events
Access Schedule:	Up to 32 holiday and vacation blocks and 16 access schedules

Environmental

Operating Range:	-31° F (-35° C) to 151° F (66° C)

Warranty

Warranty:	3-year warranty from date of installation; built-in warranty counter in memory

Stand-Alone Access Controller

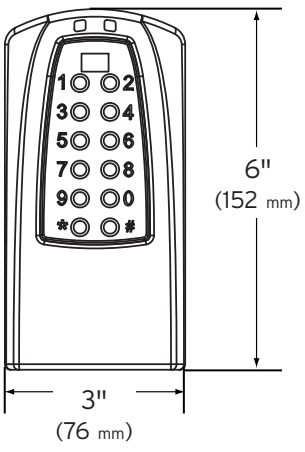

Exterior

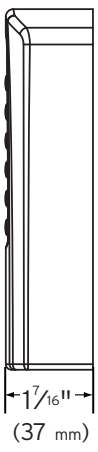

Side View

Required Features

PC Software

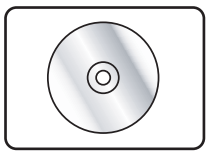

E-Plex®

5270 Stand-Alone Access Controller

Example E 5 2 7 0 - 6 2 6 - 4 1

E 5 2	7	0	-		-	4 1
Model	Function	Locking Device		Finish		Packaging

Build the model number with the desired options

Base Model	Description	Base Price
E527062641	E5070, Stand-Alone Access Controller 3,000 Access Codes, 30,000 Audit Events	$810.00

Choose one option from each category

Function Options	Description	Price
7	Stand-Alone Access Controller	No Charge

Locking Device Options	Description	Price
0	No Locking Device	No Charge

Finish Options	Description	Price
605	Bright Brass (03)	Add $25.00
606	Satin Brass (04)	Add $25.00
625	Bright Chrome (026)	Add $25.00
626	Satin Chrome (26D)	No Charge
676	Black with Satin Chrome Accents	No Charge
744	Dark Bronze with Brass Accents (simulated 10B/613)	Add $100.00

Notes

E-Plex® 5270 Series Accessories (Required)

Model Number	Description	Price
EP-EPRISE-xx-001 xx=version number. Please see kabaaccess.com/software to determine most current version number.	Enterprise Software Implementation Kit includes (See E-Plex Software section of this catalog for additional information)	$700.00

Items Supplied with the Unit

- Installation Manual
- Quick Reference Guide
- Full-Scale Template
- Required Installation Hardware

KABA®

E-Plex®
5286 Series

- **PIN Access for Entry and Egress**
- **Electronic Access Control**
- **3,000 Access Codes**
- **30,000 Audit Events**
- **Access Schedules**

Features

Access Control:	Electronic pushbutton lock—eliminates problems and costs associated with issuing, controlling and collecting keys and cards. Provides exterior access by combination, while allowing free egress.
Locking Device Options:	• Cylindrical: Cylindrical latch with 3-hour UL/ULC fire rating • Rim Exit Device: Compatible with most leading brands of Exit Devices (Exit Device and Mounting Hardware not included) • American Standard Mortise: With 1" (25 mm) and 1 ¼" (32 mm) faceplate; with and without deadbolt
Number of Codes:	Multiple Users—3,000 Codes; over 100 million possible code combinations
Programming:	Locks are programmed via E-Plex Enterprise Software (not included)—provides easy management of doors and users
Handing:	Non-handed, pre-assembled for left hand door installations—easily changed in the field
Key Override:	Key-in-Lever/Knob cylinders, small format interchangeable cores, large format removable cores
Scheduling:	Access schedules—Up to 16 different access schedules may be programmed into lock Holiday/Vacation—Up to 32 different holiday/vacation blocks may be programmed into lock
Operation Modes:	• PIN access • Passage—can be toggled on/off or can be pre-programmed to re-lock after a certain number of hours • Lockout
Authority Levels:	Five different levels allow you to control who has access to specific lock functions, including: Service Codes—programmed for one-time access or "come-and-go" access for 1-to-24 hours
User Parameters:	Code length—Adjustable to accept 4 to 8 digits Anti-tamper lockout— Adjustable from 3 to 9 invalid attempts with an adjustable period of 0 to 90 seconds Re-lock time—Adjustable from 2 to 20 seconds
Battery Operation:	Batteries located in mortise housing; offers quick and easy battery replacement for institutions (Four AA Alkaline batteries provide up to 180,000 cycles). Lock data is maintained if batteries fail.

E-Plex®
5286 Series

KABA®

Mechanical Features

Construction:	Extra heavy-duty Grade 1 lock; solid cast housings; solid cast zinc levers, tested for extensive use in indoor and outdoor applications
Numeric Keypad:	Vandal resistant, solid metal pushbuttons
Handing:	Non-handed; pre-assembled for left-hand door installation—easily changed in the field
Standard Finishes:	Satin Chrome 626 (26D) housings and levers, Black 676 housings with Satin Chrome (626) levers and accents
Optional Finishes:	Satin Brass 606 (04), Dark Bronze 744 with Brass Accents Bright Brass 605 (03), and Bright Chrome 625 (026)
Backset:	Mortise: 2 ¾" (70 mm) backset
Latches:	¾" (19 mm) latch
Minimum Stile Required:	5" (127 mm)
Weight:	8 lbs (3.63 kg)

Key Override

Key Override: Universal Key-in-Lever Cylinders: Includes Kaba 1599 6-pin cylinder (prepped to Kaba 90 or Schlage "C" Keyway, keyed different) and tailpieces for compatibility with:

Abloy 5277
Abloy 5477
Arrow C100
ASSA 65611
ASSA 65691
Corbin Russwin 2000-03
Kaba 1539
Kaba 1599
Kaba Gemini 4730
Kaba Peaks 1099
Marks
Medeco 20W200H1
Sargent 10 Line
Schlage 23-001
Schlage Primus 20-760
Australian:
Kaba experT 107K5 and Boyd KC286
European: Quattro S/Expert and AP2 (5 and 6-pin)

Interchangeable Cores: Small format—Best and equivalent (6 or 7-pin length)
Removable Cores: Large format—Medeco/ASSA/Yale (5 or 6-pin), Corbin Russwin, Schlage, and Sargent

Installation

Ease of Installation:	Utilizes existing mortise prep for simple installation
Door Preparation:	Easily installs on wood or metal doors; Four bolt installation; No wiring
Door Thickness:	1 ¾" (44 mm) to 2 ¼" (57 mm). Pre-assembled to accommodate doors 1 ¾" (44 mm) to 2 ⅛" (54 mm)
Items Supplied Include:	Installation manual, quick reference guide, operations manual, full-scale template, required installation hardware, and tailpiece for specified key override
Additional Items Supplied with Key-in-Lever cylinder model only:	Includes two Universal Kaba 1599 6-pin cylinder with tailpiece, four additional tail pieces, two nickel silver keys, and spare cylinder retainer

Electronic Features

Battery:	Batteries located in interior housing; provides quick and easy battery replacement for institutions; Four AA batteries provide up to 180,000 cycles
Indicators:	Audible and visual indicators; low battery visual indicator
Audit Capability:	30,000 Events
Access Schedules:	Up to 32 holiday and vacation blocks and 16 access schedules

Certification and Testing

Accessibility Standard:	Americans with Disabilities Act (ADA)
Fire Rating:	3-hour, UL/ULC fire door rating for "A" labeled doors
Durability:	ANSI/BHMA Grade 1 Certified for Mortise Electronic Locks (A156.13 and A156.25)
Environmental:	Indoor/Outdoor Approved Front Housing: -31° F (-35° C) to + 151° F (66° C) Rear Housing: -31° F (-35° C) to + 130° F (55° C)

Warranty

Warranty:	1-year warranty from date of installation; built-in warranty counter in lock memory

Mortise

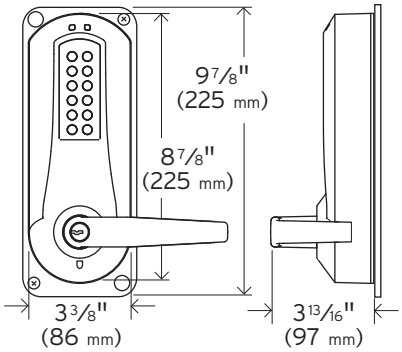

Exterior

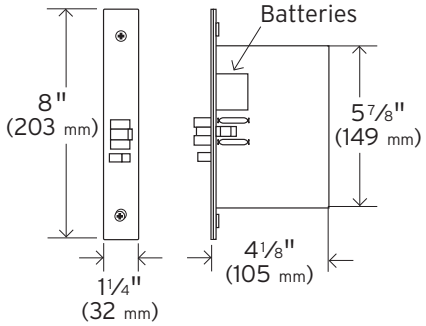

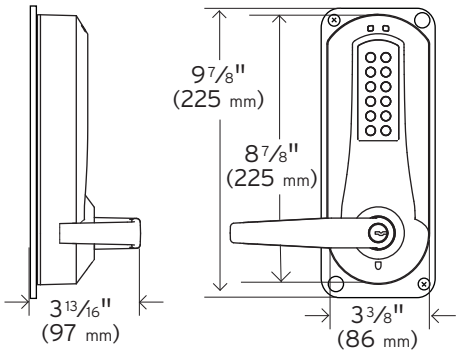

Interior

Required Features

PC Software

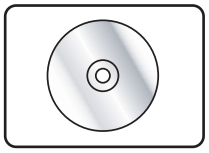

E-Plex®

5286 Series

KABA®

Example E 5 2 | 8 | 6 | X K | W L - 6 2 6 - 4 1

Model	Function	Locking Device	Key Override+	Lever / Knob		Finish	Packaging
E 5 2	8	6		W L	-		- 4 1

Build the model number with the desired options

Base Model	Description	Base Price
E5286XKWL62641	E5286, Entry/Egress (Back-to-Back) 3,000 Access Codes	$1,600.00

Choose one option from each category

Function Options	Description	Price
8	American Steel Mortise (ASM), Entry/Egress	No Charge

Locking Device Options +	Description	Price
6	Mortise 1¼" Face Plate No Deadbolt (Non-Handed)	No Charge

Key Override Options +, ++	Description		Price
XK	K-I-L	Kaba Cylinder (Kaba 90 Keyway) Included	No Charge
XS	K-I-L	Kaba Cylinder (Schlage “C” Keyway) Included	No Charge
B	I/C	Best and Equivalents (6 or 7-pin Length)	No Charge
C	R/C	Corbin Russwin	No Charge
M	R/C	Medeco/ASSA/Yale (5 or 6-pin Length)	No Charge
R	R/C	Sargent	No Charge
S	R/C	Schlage	No Charge

Lever/Knob Options	Description	Price
WL	Winston Lever	No Charge

Finish Options +	Description	Price
605	Bright Brass (03)	Add $50.00
606	Satin Brass (04)	Add $50.00
625	Bright Chrome (026)	Add $50.00
626	Satin Chrome (26D)	No Charge
676	Black with Satin Chrome Accents	No Charge
744	Dark Bronze with Brass accents (simulated 10B/613)	Add $100.00

Notes

E-Plex® 5286 Series Accessories (Required)

Model Number	Description	Price
EP-EPRISE-xx-001 xx=version number. Please see kabaaccess.com/software to determine most current version number.	Enterprise Software Implementation Kit (See E-Plex Software section of this catalog for additional information)	$700.00

+ Options must be the same for both sides of the lock

++ Interchangeable/Removable core cylinders are not included with the lock

Items Supplied with the Lock

- Installation Manual
- Quick Reference Guide
- Full-Scale Template
- Required Installation Hardware
- Tailpiece for Specified Key Override

Additional Items Supplied with Key-in-Lever Models Only

- Universal Kaba High Security 1599 6-pin cylinder with tailpiece (includes two nickel silver keys)—per side
- Four additional tailpieces (can be used with many of the leading conventional cylinders)—per side

E-Plex®
5600 Series

KABA®

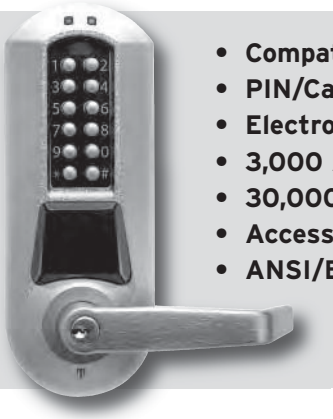

- **Compatible with Mifare®, DESFire® and iClass™ Smart Cards**
- **PIN/Card or Dual Credential**
- **Electronic Access Control**
- **3,000 Access Codes**
- **30,000 Audit Events**
- **Access Schedules**
- **ANSI/BHMA Grade-1 Certified**

Features

Access Control:	Electronic lock with dual credential capability—PIN and/or Smart card (13.56 MHz). Lock is scheduled to require credentials based on security and convenience requirements. • PIN only • Smart card only • PIN + Smart card
No Wires:	E-Plex's Patented LectroBolt™ eliminates running wires to or through the door—no risk of damage from pinched wires that can result in costly callbacks
Locking Device Options:	• Cylindrical: Cylindrical latch with 3-hour UL/ULC fire rating • Rim Exit Device: Compatible with most leading brands of Exit Devices (Exit Device and Mounting Hardware not included) • American Standard Mortise: With 1" (25 mm) and 1 ¼" (32 mm) faceplate; with and without deadbolt
Number of Codes:	Multiple Users—3,000 Codes; over 100 million possible code combinations
Programming:	Locks are programmed simply via keypad using LearnLok™ Feature without any software, or with optional E-Plex Enterprise Software to manage large number of doors and users
Handing:	Non-handed, pre-assembled for left hand door installations—easily changed in the field
Key Override:	Key-in-Lever/Knob cylinders, small format interchangeable cores, large format removable cores
Scheduling:	Access schedules—Up to 16 different access schedules may be programmed into lock Holiday/Vacation—Up to 32 different holiday/ vacation blocks may be programmed into lock
Operation Modes:	• PIN and/or Smart Card access • Passage—can be toggled on/off or can be pre-programmed to re-lock after a certain number of hours • Lockout
Authority Levels:	Five different levels allow you to control who has access to specific lock functions, including: Service Codes—programmed for one-time access or "come-and-go" access for 1-to-24 hours
User Parameters:	Code length—Adjustable to accept 4 to 8 digits Anti-tamper lockout—Adjustable from 3 to 9 invalid attempts with an adjustable period of 0 to 90 seconds Re-lock time—Adjustable from 2 to 20 seconds

Battery Operation:	Batteries located in interior housing cover; offers quick and easy battery replacement for institutions (Four AA Alkaline batteries provide up to 180,000 cycles). Lock data is maintained if batteries fail.
Ease of Installation:	LectroBolt™ (patent pending) eliminates wiring to or through the door – no risk of pinched wires
Exit Device Compatibility:	Arrow S1250 Arrow S3800 Corbin Russwin 5200/5200A Detex 10/F10 Dorma 9300/9300F Monarch 18R/F-18R Precision 21/ FL 21 Sargent 2828 Sargent 3828 Sargent 8800 Sargent 8888 Von Duprin 22/22F Von Duprin 98/98F Von Duprin 99/99F Yale 7100 **•Cannot be used with Mortise design or most vertical rod Exit Devices** **ATTENTION: Compatibility is subject to change if modifications are made by Exit Device manufacturers without Kaba Access Control's knowledge.**

Mechanical Features

Construction:	Extra heavy-duty Grade 1 lock; cylindrical lockset, solid cast housings; solid cast zinc levers, cylindrical drive wear tested for extensive use in indoor and outdoor applications
Numeric Keypad:	Vandal resistant, solid metal pushbuttons
Handing:	Non-handed: pre-assembled for left-hand door installation—easily changed in the field
Standard Finishes:	Satin Chrome 626 (26D) housings and levers, Black 676 housings with Satin Chrome 626 (26D) levers and accents
Optional Finishes:	Satin Brass 606 (04), Dark Bronze 744 with Brass Accents, Bright Brass 605 (03), and Bright Chrome 625 (026)
Backset:	**Cylindrical:** 2 ¾" (70 mm) backset, 2 ⅜" (60 mm) backset **Mortise:** 2 ¾" (70 mm) backset **Exit Trim Model:** Varies by exit device
Latches:	Cylindrical Models: ½" (13 mm) throw latch, ¾" (19 mm) throw latch (optional) Mortise Models: ¾" (19 mm) latch, 1" (25 mm) deadbolt (optional)
Minimum Stile Required:	5" (127 mm)
Weight:	Cylindrical and Mortise Models: 8 lbs (3.63 kg) Exit Trim Models: 10 lbs (4.54 kg)

Key Override

Key Override:	Universal Key-in-Lever Cylinders: Includes Kaba 1599 6-pin cylinder (prepped to Kaba 90 or Schlage "C" Keyway, keyed different) and tailpieces for compatibility with: Abloy 5277 Abloy 5477 Arrow C100 ASSA 65611 ASSA 65691 Corbin Russwin 2000-03 Kaba 1539 Kaba 1599 Kaba Gemini 4730 Kaba Peaks 1099 Marks Medeco 20W200H1 Sargent 10 Line Schlage 23-001 Schlage Primus 20-760 Australian: Kaba experT 107K5 and Boyd KC286 European: Quattro S/Expert and AP2 (5 and 6-pin) Interchangeable Cores: Small format—Best and equivalent (6 or 7-pin length) Removable Cores: Large format—Medeco/ASSA/Yale (5 or 6-pin), Corbin Russwin, Schlage, and Sargent

E-Plex®
5600 Series

KABA®

Installation

Ease of Installation:	LectroBolt™ (patent pending) eliminates wiring to or through the door – no risk of pinched wires
Door Preparation:	Easily installs on wood or metal doors; Four bolt installation; No wiring
Door Thickness:	Cylindrical Model: 1 3/8" (35 mm) to 2 1/4" (57 mm); pre-assembled to accommodate doors 1 5/8" (41 mm) to 2" (51 mm); hardware kits included for thin and thick doors
Exit Trim and Mortise Models:	1 3/4" (44 mm) to 2 1/4" (57 mm). Pre-assembled to accommodate doors 1 3/4" (44 mm) to 2 1/8" (54 mm)
Items Supplied Include:	Installation manual, quick reference guide, operations manual, full-scale template, required installation hardware, and tailpiece for specified key override
Additional Items Supplied with Key-in-Lever cylinder model only:	Includes Universal Kaba 1599 6-pin cylinder with tailpiece, four additional tailpieces, two nickel silver keys, and spare cylinder retainer

Electronic Features

Battery:	Batteries located in interior housing; provides quick and easy battery replacement for institutions; Four AA batteries provide up to 180,000 cycles
Indicators:	Audible and visual indicators; low battery visual indicator
Audit Capability:	30,000 Events
Access Schedules:	Up to 32 holiday and vacation blocks and 16 access schedules

Certification and Testing

Accessibility Standard:	Americans with Disabilities Act (ADA)
Fire Rating:	3-hour, UL/ULC fire door rating for "A" labeled doors
Durability:	ANSI/BHMA Grade 1 certified (A156.25, A156.2, A156.13, A156.3)
Environmental:	Indoor/Outdoor Approved Front Housing: -31° F (-35° C) to + 151° F (66° C) Rear Housing: -31° F (-35° C) to + 130° F (55° C)

Warranty

Warranty:	3-year warranty from date of installation; built-in warranty counter in lock memory

Cylindrical

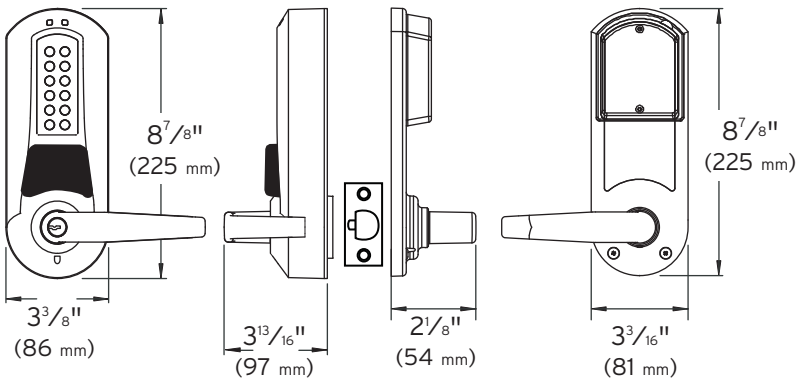

Exterior **Interior**

Optional Features

Knob

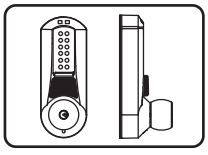

Remote Unlock

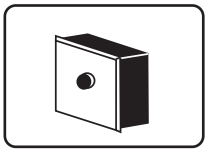

Mortise

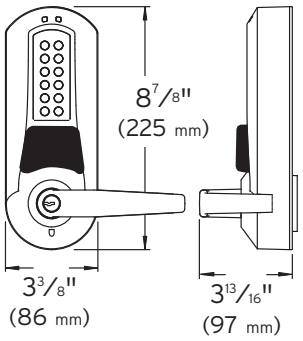

Exterior

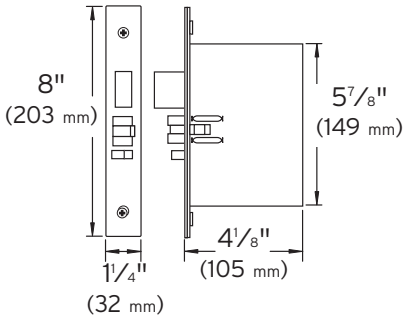

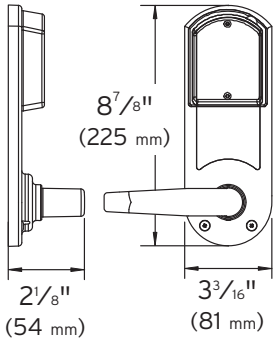

Interior

Optional Features

No Deadbolt

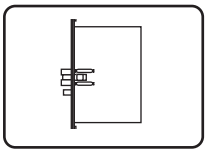

Deadbolt

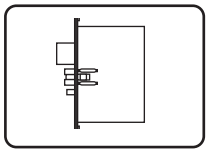

Remote Unlock

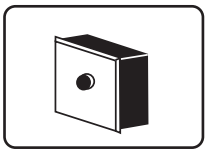

PC Software

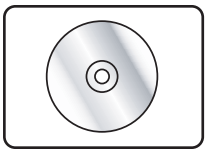

Exit Trim

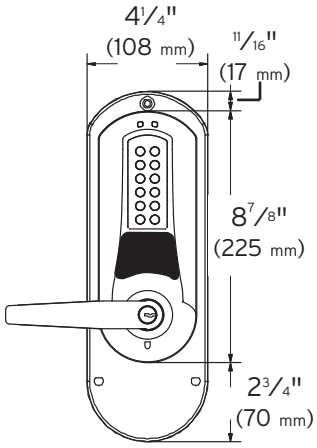

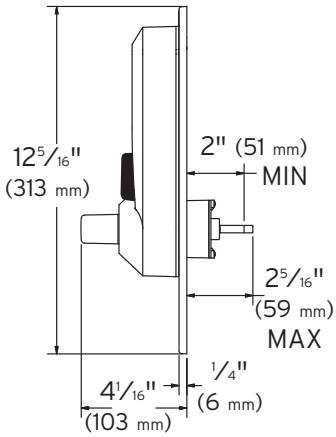

Exterior

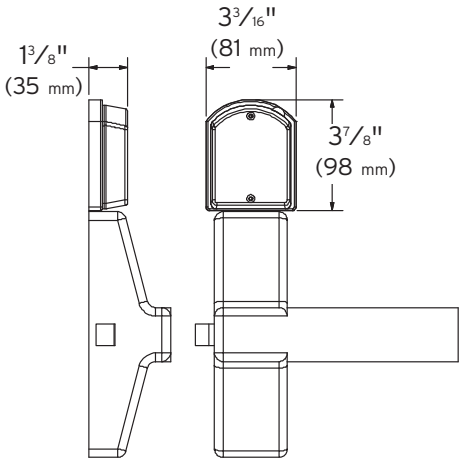

Interior

E-Plex®
5600 Series

KABA®

Example E 5 6 | 3 | 1 | X K | W L - ☐ - 6 2 6 - 4 1

Model	Function	Locking Device	Key Override	Lever / Knob	+ Optional Features	Finish	Packaging
E 5 6	☐	☐	☐☐	☐☐	☐	☐☐☐	4 1

Build the model number with the desired options

Base Model	Description	Base Price
E5631XKWL62641	E5700, Cylindrical, Key-in-Lever (Smart Card Lock) 3,000 Access Codes	$1200.00

Choose one option from each category

Function Options	Description	Price
1++	Exit Trim (E.T.)	Add $100.00
3	Cylindrical Lock (cyl)	No Charge
5	Cylindrical with Privacy (cyl)	Add $100.00
6	American Steel Mortise (ASM)	Add $120.00

Locking Device Options	Description	Price
0++	Exit Trim	No Charge
1	Cylindrical ½" (13 mm) throw latch, floating face plate 2 ¾" (70 mm) backset	No Charge
2	Cylindrical ½" (13 mm) throw latch, floating face plate 2 ⅜" (60 mm) backset	No Charge
5	Cylindrical ¾" (19 mm) throw latch, beveled face plate 2 ¾" (70 mm) backset	No Charge
3	Mortise LH – 1" (25 mm) Face Plate No Deadbolt	No Charge
4	Mortise RH – 1" (25 mm) Face Plate No Deadbolt	No Charge
8	Mortise LH – 1" (25 mm) Face Plate With Deadbolt	Add $30.00
9	Mortise RH – 1" (25 mm) Face Plate With Deadbolt	Add $30.00
6	STD Mortise 1¼" Face Plate No Deadbolt (Non-Handed)	No Charge
7	STD Mortise 1¼" Face Plate With Deadbolt (Non-Handed)	Add $30.00

Key Override Options+++	Description		Price
XK	K-I-L	Kaba Cylinder (Kaba 90 Keyway) Included	No Charge
XS	K-I-L	Kaba Cylinder (Schlage “C” Keyway) Included	No Charge
B	I/C	Best and Equivalents (6 or 7-pin Length)	No Charge
C	R/C	Corbin Russwin	No Charge
M	R/C	Medeco/ASSA/Yale (5 or 6-pin Length)	No Charge
R	R/C	Sargent	No Charge
S	R/C	Schlage	No Charge

Lever/Knob Options	Description	Price
WL	Winston Lever	No Charge
WK	Winston Knob (available with Cylindrical only)	No Charge

Optional Features+	Description	Price
0	Remote Unlock (Not available with Exit Trim Models) Lock supplied with pigtail ready to wire to remote momentary contact switch (not included)	Add $80.00

Finish Options	Description	Price
605	Bright Brass (03)	Add $25.00
606	Satin Brass (04)	Add $25.00
625	Bright Chrome (026)	Add $25.00
626	Satin Chrome (26D)	No Charge
676	Black with Satin Chrome Accents	No Charge
744	Dark Bronze with Brass Accents (Simulated 10B/613)	Add $100.00

Notes

E-Plex® 5600 Series Accessories (Optional)

Model Number	Description	Price
EP-EPRISE-xx-001 xx=version number. Please see kabaaccess.com/software to determine most current version number.	Enterprise Software Implementation Kit includes (See E-Plex Software section of this catalog for additional information)	$700.00
120-ENSC-000	USB Smart Card Reader/Enroller (Required with software above)	$440.00

+ Optional Features

This field may be left blank if no optional features are required

++ Exit Device Compatibility

Arrow S1250
Arrow S3800
Corbin Russwin 5200 / 5200A
Detex 10 / F10
Dorma 9300 / 9300F
Monarch 18R / F-18R
Precision 21 / FL 21
Sargent 2828
Sargent 3828
Sargent 8800
Sargent 8888
Von Duprin 22 / 22F
Von Duprin 98 / 98F
Von Duprin 99 / 99F
Yale 7100

- **Cannot be used with mortise design or most vertical rod Exit Devices**

ATTENTION: Compatibility is subject to change if modifications are made by Exit Device manufacturers without Kaba Access Control's knowledge

+++ Interchangeable/Removable core cylinders are not included with the lock

Items Supplied with the Lock

- Installation Manual
- Quick Reference Guide
- Full-Scale Template
- Required Installation Hardware
- Tailpiece for Specified Key Override

Additional Items Supplied with Key-in-Lever Models Only

- Universal Kaba High Security 1599 6-pin cylinder with tailpiece (includes two nickel silver keys)
- Four additional tailpieces (can be used with many of the leading conventional cylinders)

E-Plex®
5670 Series

- **Compatible with Mifare®, DESFire® and iClass™ Smart Cards**
- **Dual Credential Card/PIN Access**
- **Vandal Resistant**
- **Solid Cast Housing**
- **3,000 Access Users**
- **30,000 Audit Events**
- **Access Schedules**
- **Works with Most Electronic Door Hardware**

Features

Access Control:	Electronic dual credential solution for dual-swing doors, parking gates, glass doors, etc., featuring online-type functionality in a stand-alone, easy to install reader housing with keypad-PIN and/or Smart card (13.56 MHz). Reader is scheduled to require credentials based on security and convenience requirements: PIN only; Smart card only; PIN + Smart card.
Number of Codes:	Multiple Users—3,000 Codes; over 100 million possible code combinations
Programming:	Locks are programmed simply via keypad using LearnLok™ Feature without any software, or with optional E-Plex Enterprise Software to manage large number of doors and users
Scheduling:	Access schedules—Up to 16 different access schedules may be programmed into reader Holiday/Vacation—Up to 32 different holiday/vacation blocks may be programmed into reader
Operation Modes:	• PIN and/or Smart Card access • Passage—can be toggled on/off or can be pre-programmed to re-lock after a certain number of hours • Lockout
Authority Levels:	Five different levels allow you to control who has access to specific lock functions, including: Service Codes—programmed for one-time access or "come-and-go" access for 1-to-24 hours
User Parameters:	Code length—Adjustable to accept 4 to 8 digits Anti-tamper lockout—Adjustable from 3 to 9 invalid attempts with an adjustable period of 0 to 90 seconds Re-lock time—Adjustable from 2 to 20 seconds
Power:	Requires 12-24Vdc power input from standard, off-the-shelf power interface units. If power is lost, user data and lock parameters are retained in on-board memory.
Ease of Installation:	Simple, easy to install reader unit is predrilled for single gang box or wall mounting. Lockable interface controller unit enclosure is predrilled and has knockouts for simple wiring with low voltage connections directly into off-the-shelf power interface units. Product also includes a contact closure, alarm shunt output to interface with new or existing fire alarms and security systems.
Vandal Resistance:	Exclusive tamper-switch circuitry in reader housing prevents unauthorized access if unit is attacked or removed from mounting plate. If tamper is detected, the reader unit emits constant bright blue lights and all internal wires other than power are passive until unit is reset. Once reader unit is later reinstalled and/or remotely reset, PIN access is restored.

Mechanical Features

Construction:	Solid cast housing
Numeric Keypad:	Vandal resistant, solid metal pushbuttons
Standard Finishes:	Satin Chrome 626 (26D) housings, Black 676 housings with Satin Chrome 626 (26D) Buttons
Optional Finishes:	Satin Brass 606 (04), Dark Bronze 744 with Brass Buttons, Bright Brass 605 (03), and Bright Chrome 625 (026)
Weight:	5.26 lbs. (2.38)

Installation

Ease of Installation:	Simple, easy to install reader unit is predrilled for single gang box or wall mounting. Lockable interface controller unit enclosure is predrilled and has knockouts for simple wiring with low voltage connections directly into off-the-shelf power interface units. Product also includes a contact closure, alarm shunt output to interface with new or existing fire alarms and security systems.
Items Supplied Include:	Installation manual, quick reference guide, operations manual, full-scale template, and required installation hardware

Electronic Features

Vandal Resistance:	Exclusive tamper-switch circuitry in reader housing prevents unauthorized access if unit is attacked or removed from mounting plate. If tamper is detected, the reader unit emits constant bright blue lights and all internal wires other than power are passive until unit is reset. Once reader unit is later reinstalled and/or remotely reset, PIN access is restored.
Indicators:	Audible and visual indicators; visual tamper indicator
Audit Capability:	30,000 Events
Access Schedule:	Up to 32 holiday and vacation blocks and 16 access schedules

Environmental

Operating Range:	-31° F (-35° C) to 151° F (66° C)

Warranty

Warranty:	3-year warranty from date of installation; built-in warranty counter in memory

Stand-Alone Access Controller

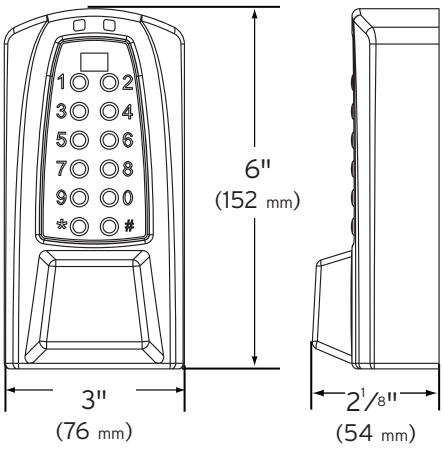

Exterior **Side View**

Optional Features

PC Software

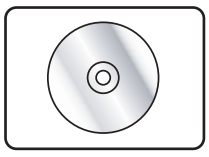

E-Plex®
5670 Series

KABA®

Example E 5 6 | 7 | 0 | - | 6 2 6 | - | 4 1

E 5 6	7	0	-				-	4 1
Model	Function	Locking Device				Finish		Packaging

Build the model number with the desired options

Base Model	Description	Base Price
E567062641	E5770, Stand-Alone Access Controller PIN/Smart Card 3,000 Access Users, 30,000 Audit Events	$1060.00

Choose one option from each category

Function Options	Description	Price
7	Stand-Alone Access Controller	No Charge

Locking Device Options	Description	Price
0	No Locking Device	No Charge

Finish Options	Description	Price
605	Bright Brass (03)	Add $25.00
606	Satin Brass (04)	Add $25.00
625	Bright Chrome (026)	Add $25.00
626	Satin Chrome (26D)	No Charge
676	Black with Satin Chrome Accents	No Charge
744	Dark Bronze with Brass Accents (simulated 10B/613)	Add $100.00

Notes

E-Plex® 5670 Series Accessories (Optional)

Model Number	Description	Price
EP-EPRISE-xx-001 xx=version number. Please see kabaaccess.com/software to determine most current version number.	Enterprise Software Implementation Kit (See E-Plex Software section of this catalog for additional information)	$700.00
120-ENSC-000	USB Smart Card Reader/Enroller (Required with software above)	$440.00

Items Supplied with the Unit

- Installation Manual
- Quick Reference Guide
- Full-Scale Template
- Required Installation Hardware

KABA®

E-Plex®
5686 Series

- **Compatible with Mifare®, DESFire® and iClass™ Smart Cards**
- **PIN/Card or Dual Credential for Entry and Egress**
- **Electronic Pushbutton Lock**
- **3,000 Access Codes**
- **30,000 Audit Events**
- **Access Schedules**
- **Optional Software**

Features

Access Control:	Electronic lock with dual credential capability—PIN and/or Smart card (13.56 MHz). Lock is scheduled to require credentials based on security and convenience requirements. • PIN only • Smart card only • PIN + Smart card
Locking Device Options:•	American Standard Mortise: With 1 ¼" (32 mm) faceplate; without deadbolt
Number of Codes:	Multiple Users—3,000 Codes; over 100 million possible code combinations
Programming:	Locks are programmed simply via keypad using LearnLok™ Feature without any software, or with optional E-Plex Enterprise Software to manage large number of doors and users
Handing:	Non-handed; pre-assembled for left hand door installations—easily changed in the field
Key Override:	Key-in-Lever/Knob cylinders, small format interchangeable cores, large format removable cores
Scheduling:	Access schedules—Up to 16 different access schedules may be programmed into lock Holiday/Vacation—Up to 32 different holiday/vacation blocks may be programmed into lock
Operation Modes:	• PIN access • Passage—can be toggled on/off or can be pre-programmed to re-lock after a certain number of hours • Lockout
Authority Levels:	Five different levels allow you to control who has access to specific lock functions, including: Service Codes—programmed for one-time access or "come-and-go" access for 1-to-24 hours
User Parameters:	Code length—Adjustable to accept 4 to 8 digits Anti-tamper lockout—Adjustable from 3 to 9 invalid attempts with an adjustable period of 0 to 90 seconds Re-lock time—Adjustable from 2 to 20 seconds
Battery Operation:	Batteries located in mortise housing; offers quick and easy battery replacement for institutions (Four AA Alkaline batteries provide up to 180,000 cycles). Lock data is maintained if batteries fail.
Ease of Installation:	LectroBolt™ (patent pending) eliminates wiring to or through the door—no risk of pinched wires

E-Plex®
5686 Series

KABA®

Mechanical Features

Construction:	Extra heavy-duty Grade 1 lock; solid cast housings; solid cast zinc levers, tested for extensive use in indoor and outdoor applications
Numeric Keypad:	Vandal resistant, solid metal pushbuttons
Handing:	Non-handed; pre-assembled for left-hand door installation—easily changed in the field
Standard Finishes:	Satin Chrome 626 (26D) housings and levers, Black 676 housings with Satin Chrome 626 (26D) levers and accents
Optional Finishes:	Satin Brass 606 (04), Dark Bronze 744 with Brass Accents, Bright Brass 605 (03), and Bright Chrome 625 (026)
Backset:	Mortise: 2 ¾" (70 mm) backset
Latches:	¾" (19 mm) latch
Minimum Stile Required:	5" (127 mm)
Weight:	8 lbs (3.63 kg)

Key Override

Key Override: Universal Key-in-Lever Cylinders: Includes Kaba 1599 6-pin cylinder (prepped to Kaba 90 or Schlage "C" Keyway, keyed different) and tailpieces for compatibility with:

Abloy 5277
Abloy 5477
Arrow C100
ASSA 65611
ASSA 65691
Corbin Russwin 2000-03
Kaba 1539
Kaba 1599
Kaba Gemini 4730
Kaba Peaks 1099
Marks
Medeco 20W200H1
Sargent 10 Line
Schlage 23-001
Schlage Primus 20-760

Australian:
Kaba experT 107K5 and Boyd KC286

European: Quattro S/Expert and AP2 (5 and 6-pin)

Interchangeable Cores: Small format—Best and equivalent (6 or 7-pin length)
Removable Cores: Large format—Medeco/ASSA/Yale (5 or 6-pin), Corbin Russwin, Schlage, and Sargent

Installation

Ease of Installation:	Utilizes existing mortise prep for simple installation
Door Preparation:	Easily installs on wood or metal doors; Four bolt installation; No wiring
Door Thickness:	1 ¾" (44 mm) to 2 ¼" (57 mm). Pre-assembled to accommodate doors 1 ¾" (44 mm) to 2 ⅛" (54 mm)
Items Supplied Include:	Installation manual, quick reference guide, operations manual, full-scale template, required installation hardware, and tailpiece for specified key override
Additional Items Supplied with Key-in-Lever cylinder model only:	Includes two Universal Kaba 1599 6-pin cylinder with tailpiece, four additional tail pieces, two nickel silver keys, and spare cylinder retainer

Electronic Features

Battery:	Batteries located in mortise housing; provides quick and easy battery replacement for institutions; Four AA batteries provide up to 180,000 cycles
Indicators:	Audible and visual indicators; low battery visual indicator
Audit Capability:	30,000 Events
Access Schedules:	Up to 32 holiday and vacation blocks and 16 access schedules

Certification and Testing

Accessibility Standard:	Americans with Disabilities Act (ADA)
Fire Rating:	3-hour, UL/ULC fire door rating for "A" labeled doors
Durability:	ANSI/BHMA Grade 1 Certified for Mortise Electronic Locks (A156.13 and A156.25)
Environmental:	Indoor/Outdoor Approved Front Housing: -31° F (-35° C) to + 151° F (66° C) Rear Housing: -31° F (-35° C) to + 130° F (55° C)

Warranty

Warranty:	1-year warranty from date of installation; built-in warranty counter in lock memory

Mortise

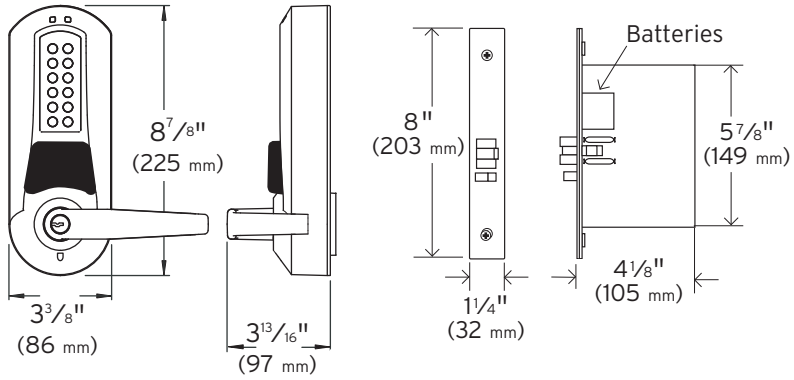

Exterior

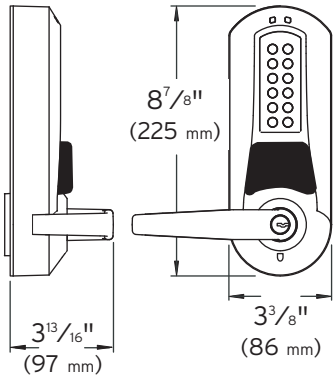

Interior

Optional Features

PC Software

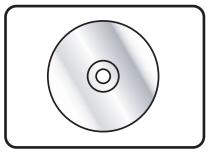

E-Plex®
5686 Series

KABA®

Example E 5 6 | 8 | 6 | X K | W L - 6 2 6 - 4 1

E 5 6	8	6		W L	-		- 4 1
Model	Function	Locking Device	Key Override+	Lever / Knob	-	Finish	- Packaging

Build the model number with the desired options

Base Model	Description	Base Price
E5686XKWL62641	E5686, Entry/Egress (Back-to-Back), 3,000 Access Codes, 30,000 Audit Events (Smart Card Lock)	$2,000.00

Choose one option from each category

Function Options	Description	Price
8	American Steel Mortise (ASM), Entry/Egress	No Charge

Locking Device Options +	Description	Price
6	Mortise 1¼" Face Plate No Deadbolt (Non-Handed)	No Charge

Key Override Options +, ++	Description		Price
XK	K-I-L	Kaba Cylinder (Kaba 90 Keyway) Included	No Charge
XS	K-I-L	Kaba Cylinder (Schlage "C" Keyway) Included	No Charge
B	I/C	Best and Equivalents (6 or 7-pin Length)	No Charge
C	R/C	Corbin Russwin	No Charge
M	R/C	Medeco/ASSA/Yale (5-or 6-pin Length)	No Charge
R	R/C	Sargent	No Charge
S	R/C	Schlage	No Charge

Lever/Knob Options	Description	Price
WL	Winston Lever	No Charge

Finish Options +	Description	Price
605	Bright Brass (03)	Add $50.00
606	Satin Brass (04)	Add $50.00
625	Bright Chrome (026)	Add $50.00
626	Satin Chrome (26D)	No Charge
676	Black with Satin Chrome Accents	No Charge
744	Dark Bronze with Brass Accents (simulated 10B/613)	Add $100.00

Notes

E-Plex® 5686 Series Accessories (Optional)

Model Number	Description	Price
EP-EPRISE-xx-001 xx=version number. Please see kabaaccess.com/software to determine most current version number.	Enterprise Software Implementation Kit includes (See E-Plex Software section of this catalog for additional information)	$700.00
120-ENSC-000	USB Smart Card Reader/Enroller (Required with software above)	$440.00

+ Options must be the same for both sides of the lock

++ Interchangeable/Removable core cylinders are not included with the lock

Items Supplied with the Lock

- Installation Manual
- Quick Reference Guide
- Full-Scale Template
- Required Installation Hardware
- Tailpiece for Specified Key Override

Additional Items Supplied with Key-in-Lever Models Only

- Universal Kaba High Security 1599 6-pin cylinder with tailpiece (includes two nickel silver keys)—per side
- Four additional tailpieces (can be used with many of the leading conventional cylinders)—per side

E-Plex®

5700 Series

KABA®

- **PIN/PROX or Dual Credential**
- **Electronic Access Control**
- **3,000 Access Codes**
- **30,000 Audit Events**
- **Access Schedules**
- **ANSI/BHMA Grade-1 Certified**

Features

Access Control:	Electronic lock with dual credential capability—PIN and/or PROX card (HID, 125khz, 26 to 84-bit format). Lock is scheduled to require credentials based on security and convenience requirements. • PIN only • PROX card only • PIN + PROX card
No Wires:	E-Plex's Patented LectroBolt™ eliminates running wires to or through the door—no risk of damage from pinched wires that can result in costly callbacks
Locking Device Options:	• Cylindrical: Cylindrical latch with 3-hour UL/ULC fire rating • Rim Exit Device: Compatible with most leading brands of Exit Devices (Exit Device and Mounting Hardware not included) • American Standard Mortise: With 1" (25 mm) and 1 ¼" (32 mm) faceplate; with and without deadbolt
Number of Codes:	Multiple Users—3,000 Codes; over 100 million possible code combinations
Programming:	Locks are programmed simply via keypad using LearnLok™ Feature without any software, or with optional E-Plex Enterprise Software to manage large number of doors and users
Handing:	Non-handed, pre-assembled for left hand door installations—easily changed in the field
Key Override:	Key-in-Lever/Knob cylinders, small format interchangeable cores, large format removable cores
Scheduling:	Access schedules—Up to 16 different access schedules may be programmed into lock Holiday/Vacation—Up to 32 different holiday/ vacation blocks may be programmed into lock
Operation Modes:	• PIN access • Passage—can be toggled on/off or can be pre-programmed to re-lock after a certain number of hours • Lockout
Authority Levels:	Five different levels allow you to control who has access to specific lock functions, including: Service Codes—programmed for one-time access or "come-and-go" access for 1-to-24 hours
User Parameters:	Code length—Adjustable to accept 4 to 8 digits Anti-tamper lockout—Adjustable from 3 to 9 invalid attempts with an adjustable period of 0 to 90 seconds Re-lock time—Adjustable from 2 to 20 seconds

Battery Operation:	Batteries located in interior housing cover; offers quick and easy battery replacement for institutions (Four AA Alkaline batteries provide up to 180,000 cycles). Lock data is maintained if batteries fail.
Ease of Installation:	LectroBolt™ (patent pending) eliminates wiring to or through the door – no risk of pinched wires
Exit Device Compatibility:	Arrow S1250 Arrow S3800 Corbin Russwin 5200/5200A Detex 10/F10 Dorma 9300/9300F Monarch 18R/F-18R Precision 21/ FL 21 Sargent 2828 Sargent 3828 Sargent 8800 Sargent 8888 Von Duprin 22/22F Von Duprin 98/98F Von Duprin 99/99F Yale 7100 **•Cannot be used with Mortise design or most vertical rod Exit Devices** **ATTENTION: Compatibility is subject to change if modifications are made by Exit Device manufacturers without Kaba Access Control's knowledge.**

Mechanical Features

Construction:	Extra heavy-duty Grade 1 lock; cylindrical lockset, solid cast housings; solid cast zinc levers, cylindrical drive wear tested for extensive use in indoor and outdoor applications
Numeric Keypad:	Vandal resistant, solid metal pushbuttons
Handing:	Non-handed: pre-assembled for left-hand door installation—easily changed in the field
Standard Finishes:	Satin Chrome 626 (26D) housings and levers, Black 676 housings with Satin Chrome 626 (26D) levers and accents
Optional Finishes:	Satin Brass 606 (04), Dark Bronze 744 with Brass Accents, Bright Brass 605 (03), and Bright Chrome 625 (026)
Backset:	**Cylindrical:** 2 ¾" (70 mm) backset, 2 ⅜" (60 mm) backset **Mortise:** 2 ¾" (70 mm) backset **Exit Trim Model:** Varies by exit device
Latches:	Cylindrical Models: ½" (13 mm) throw latch, ¾" (19 mm) throw latch (optional) Mortise Models: ¾" (19 mm) latch, 1" (25 mm) deadbolt (optional)
Minimum Stile Required:	5" (127 mm)
Weight:	Cylindrical and Mortise Models: 8 lbs (3.63 kg) Exit Trim Models: 10 lbs (4.54 kg)

Key Override

Key Override:	Universal Key-in-Lever Cylinders: Includes Kaba 1599 6-pin cylinder (prepped to Kaba 90 or Schlage "C" Keyway, keyed different) and tailpieces for compatibility with: Abloy 5277 Abloy 5477 Arrow C100 ASSA 65611 ASSA 65691 Corbin Russwin 2000-03 Kaba 1539 Kaba 1599 Kaba Gemini 4730 Kaba Peaks 1099 Marks Medeco 20W200H1 Sargent 10 Line Schlage 23-001 Schlage Primus 20-760 Australian: Kaba experT 107K5 and Boyd KC286 European: Quattro S/Expert and AP2 (5 and 6-pin) Interchangeable Cores: Small format—Best and equivalent (6 or 7-pin length) Removable Cores: Large format—Medeco/ASSA/Yale (5 or 6-pin), Corbin Russwin, Schlage, and Sargent

E-Plex®
5700 Series

KABA®

Installation

Ease of Installation:	LectroBolt™ (patent pending) eliminates wiring to or through the door – no risk of pinched wires
Door Preparation:	Easily installs on wood or metal doors; Four bolt installation; No wiring
Door Thickness:	Cylindrical Model: 1 3/8" (35 mm) to 2 1/4" (57 mm); pre-assembled to accommodate doors 1 5/8" (41 mm) to 2" (51 mm); hardware kits included for thin and thick doors
Exit Trim and Mortise Models:	1 3/4" (44 mm) to 2 1/4" (57 mm). Pre-assembled to accommodate doors 1 3/4" (44 mm) to 2 1/8" (54 mm)
Items Supplied Include:	Installation manual, quick reference guide, operations manual, full-scale template, required installation hardware, and tailpiece for specified key override
Additional Items Supplied with Key-in-Lever cylinder model only:	Includes Universal Kaba 1599 6-pin cylinder with tailpiece, four additional tailpieces, two nickel silver keys, and spare cylinder retainer

Electronic Features

Battery:	Batteries located in interior housing; provides quick and easy battery replacement for institutions; Four AA batteries provide up to 180,000 cycles
Indicators:	Audible and visual indicators; low battery visual indicator
Audit Capability:	30,000 Events
Access Schedules:	Up to 32 holiday and vacation blocks and 16 access schedules

Certification and Testing

Accessibility Standard:	Americans with Disabilities Act (ADA)
Fire Rating:	3-hour, UL/ULC fire door rating for "A" labeled doors
Durability:	ANSI/BHMA Grade 1 certified (A156.25, A156.2, A156.13, A156.3)
Environmental:	Indoor/Outdoor Approved Front Housing: -31° F (-35° C) to + 151° F (66° C) Rear Housing: -31° F (-35° C) to + 130° F (55° C)

Warranty

Warranty:	3-year warranty from date of installation; built-in warranty counter in lock memory

Cylindrical

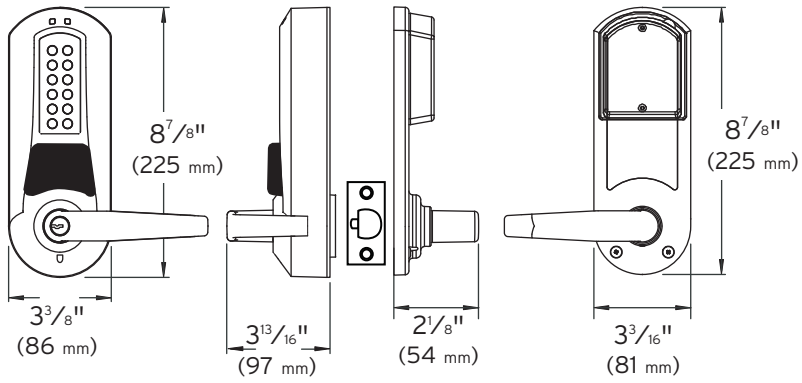

Exterior **Interior**

Optional Features

Knob

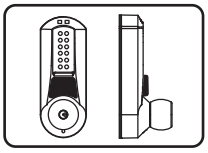

Remote Unlock

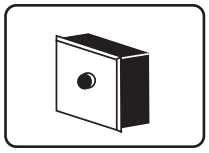

Mortise

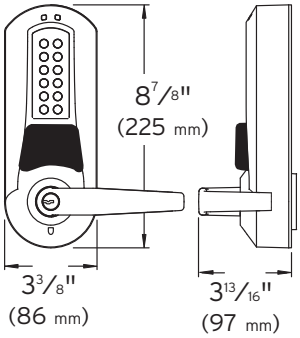

Exterior

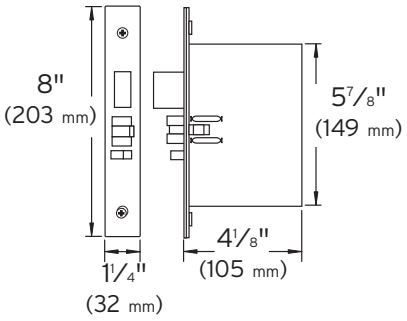

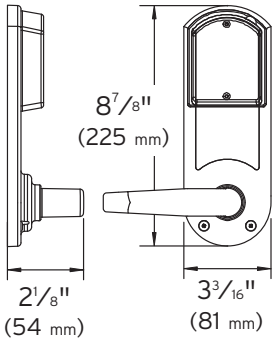

Interior

Optional Features

No Deadbolt

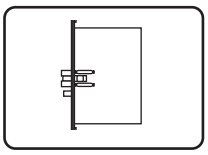

Deadbolt

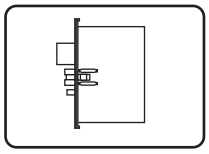

Remote Unlock

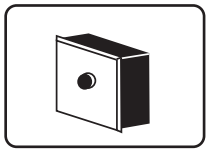

PC Software

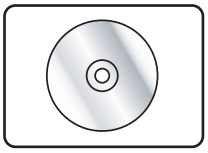

Exit Trim

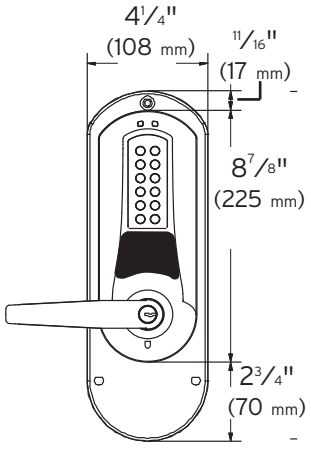

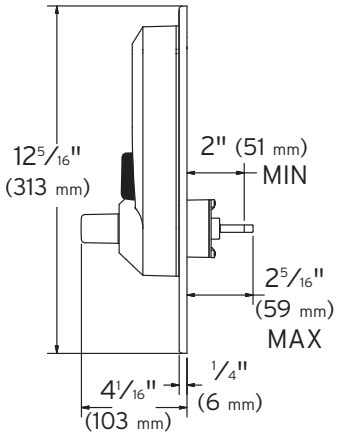

Exterior

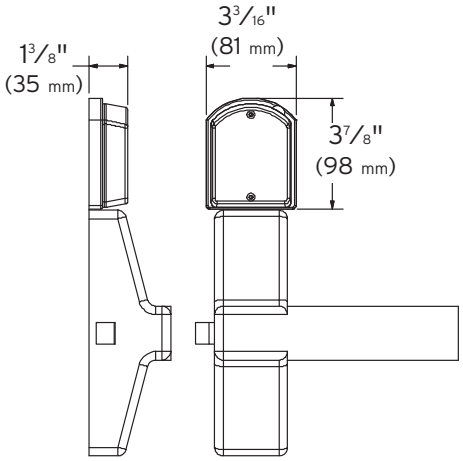

Interior

E-Plex®

5700 Series

KABA®

Example E 5 7 | 3 | 1 | X K | W L - [ ] - 6 2 6 - 4 1

Model	Function	Locking Device	Key Override	Lever / Knob	+ Optional Features	Finish	Packaging
E 5 7							4 1

Build the model number with the desired options

Base Model	Description	Base Price
E5731XKWL62641	E5700, Cylindrical, Key-in-Lever (PROX Lock) 3,000 Access Codes	$1100.00

Choose one option from each category

Function Options	Description	Price
1++	Exit Trim (E.T.)	Add $100.00
3	Cylindrical Lock (cyl)	No Charge
5	Cylindrical with Privacy (cyl)	Add $100.00
6	American Steel Mortise (ASM)	Add $120.00

Locking Device Options	Description	Price
0++	Exit Trim	No Charge
1	Cylindrical ½" (13 mm) throw latch, floating face plate 2 ¾" (70 mm) backset	No Charge
2	Cylindrical ½" (13 mm) throw latch, floating face plate 2 ⅜" (60 mm) backset	No Charge
5	Cylindrical ¾" (19 mm) throw latch, beveled face plate 2 ¾" (70 mm) backset	No Charge
3	Mortise LH – 1" (25 mm) Face Plate No Deadbolt	No Charge
4	Mortise RH – 1" (25 mm) Face Plate No Deadbolt	No Charge
8	Mortise LH – 1" (25 mm) Face Plate With Deadbolt	Add $30.00
9	Mortise RH – 1" (25 mm) Face Plate With Deadbolt	Add $30.00
6	STD Mortise 1¼" Face Plate No Deadbolt (Non-Handed)	No Charge
7	STD Mortise 1¼" Face Plate With Deadbolt (Non-Handed)	Add $30.00

Key Override Options+++	Description		Price
XK	K-I-L	Kaba Cylinder (Kaba 90 Keyway) Included	No Charge
XS	K-I-L	Kaba Cylinder (Schlage “C” Keyway) Included	No Charge
B	I/C	Best and Equivalents (6 or 7-pin Length)	No Charge
C	R/C	Corbin Russwin	No Charge
M	R/C	Medeco/ASSA/Yale (5 or 6-pin Length)	No Charge
R	R/C	Sargent	No Charge
S	R/C	Schlage	No Charge

Lever/Knob Options	Description	Price
WL	Winston Lever	No Charge
WK	Winston Knob (available with Cylindrical only)	No Charge

Optional Features+	Description	Price
0	Remote Unlock (Not available with Exit Trim Models) Lock supplied with pigtail ready to wire to remote momentary contact switch (not included)	Add $80.00

Finish Options	Description	Price
605	Bright Brass (03)	Add $25.00
606	Satin Brass (04)	Add $25.00
625	Bright Chrome (026)	Add $25.00
626	Satin Chrome (26D)	No Charge
676	Black with Satin Chrome Accents	No Charge
744	Dark Bronze with Brass Accents (Simulated 10B/613)	Add $100.00

Notes

E-Plex® 5700 Series Accessories (Optional)

Model Number	Description	Price
EP-EPRISE-xx-001 xx=version number. Please see kabaaccess.com/software to determine most current version number.	Enterprise Software Implementation Kit includes (See E-Plex Software section of this catalog for additional information)	$700.00
54561-000-41	USB PROX Reader/Enroller (Required with software above)	$440.00

+ Optional Features

This field may be left blank if no optional features are required

++ Exit Device Compatibility

Arrow S1250
Arrow S3800
Corbin Russwin 5200 / 5200A
Detex 10 / F10
Dorma 9300 / 9300F
Monarch 18R / F-18R
Precision 21 / FL 21
Sargent 2828
Sargent 3828
Sargent 8800
Sargent 8888
Von Duprin 22 / 22F
Von Duprin 98 / 98F
Von Duprin 99 / 99F
Yale 7100

- **Cannot be used with mortise design or most vertical rod Exit Devices**

ATTENTION: Compatibility is subject to change if modifications are made by Exit Device manufacturers without Kaba Access Control's knowledge

+++ Interchangeable/Removable core cylinders are not included with the lock

Items Supplied with the Lock

- Installation Manual
- Quick Reference Guide
- Full-Scale Template
- Required Installation Hardware
- Tailpiece for Specified Key Override

Additional Items Supplied with Key-in-Lever Models Only

- Universal Kaba High Security 1599 6-pin cylinder with tailpiece (includes two nickel silver keys)
- Four additional tailpieces (can be used with many of the leading conventional cylinders)

E-Plex®

5770 Stand-Alone Access Controller

- **Dual Credential PIN/PROX Access**
- **Vandal Resistant**
- **Solid Cast Housing**
- **3,000 Access Users**
- **30,000 Audit Events**
- **Access Schedules**
- **Works with Most Electronic Door Hardware**

Features	
Access Control:	Electronic dual credential solution for dual-swing doors, parking gates, glass doors, etc., featuring online-type functionality in a stand-alone, easy to install reader housing with keypad-PIN and/or PROX card (HID, 125khz, 26 to 84-bit format). Reader is scheduled to require credentials based on security and convenience requirements: PIN only; PROX card only; PIN + PROX card.
Number of Codes:	Multiple Users—3,000 Codes; over 100 million possible code combinations
Programming:	Locks are programmed simply via keypad using LearnLok™ Feature without any software, or with optional E-Plex Enterprise Software to manage large number of doors and users
Scheduling:	Access schedules—Up to 16 different access schedules may be programmed into reader Holiday/Vacation—Up to 32 different holiday/vacation blocks may be programmed into reader
Operation Modes:	• PIN access • Passage—can be toggled on/off or can be pre-programmed to re-lock after a certain number of hours • Lockout
Authority Levels:	Five different levels allow you to control who has access to specific lock functions, including: Service Codes—programmed for one-time access or "come-and-go" access for 1-to-24 hours
User Parameters:	Code length—Adjustable to accept 4 to 8 digits Anti-tamper lockout—Adjustable from 3 to 9 invalid attempts with an adjustable period of 0 to 90 seconds Re-lock time—Adjustable from 2 to 20 seconds
Power:	Requires 12-24Vdc power input from standard, off-the-shelf power interface units. If power is lost, user data and lock parameters are retained in on-board memory.
Ease of Installation:	Simple, easy to install reader unit is predrilled for single gang box or wall mounting. Lockable interface controller unit enclosure is predrilled and has knockouts for simple wiring with low voltage connections directly into off-the-shelf power interface units. Product also includes a contact closure, alarm shunt output to interface with new or existing fire alarms and security systems.
Vandal Resistance:	Exclusive tamper-switch circuitry in reader housing prevents unauthorized access if unit is attacked or removed from mounting plate. If tamper is detected, the reader unit emits constant bright blue lights and all internal wires other than power are passive until unit is reset. Once reader unit is later reinstalled and/or remotely reset, PIN access is restored.

Mechanical Features	
Construction:	Solid cast housing
Numeric Keypad:	Vandal resistant, solid metal pushbuttons
Standard Finishes:	Satin Chrome 626 (26D) housings, Black 676 housings with Satin Chrome 626 (26D) Buttons
Optional Finishes:	Satin Brass 606 (04), Dark Bronze 744 with Brass Buttons, Bright Brass 605 (03), and Bright Chrome 625 (026)
Weight:	5.26 lbs. (2.38)

Installation	
Ease of Installation:	Simple, easy to install reader unit is predrilled for single gang box or wall mounting. Lockable interface controller unit enclosure is predrilled and has knockouts for simple wiring with low voltage connections directly into off-the-shelf power interface units. Product also includes a contact closure, alarm shunt output to interface with new or existing fire alarms and security systems.
Items Supplied Include:	Installation manual, quick reference guide, operations manual, full-scale template, and required installation hardware

Electronic Features	
Vandal Resistance:	Exclusive tamper-switch circuitry in reader housing prevents unauthorized access if unit is attacked or removed from mounting plate. If tamper is detected, the reader unit emits constant bright blue lights and all internal wires other than power are passive until unit is reset. Once reader unit is later reinstalled and/or remotely reset, PIN access is restored.
Indicators:	Audible and visual indicators; visual tamper indicator
Audit Capability:	30,000 Events
Access Schedule:	Up to 32 holiday and vacation blocks and 16 access schedules

Environmental	
Operating Range:	-31° F (-35° C) to 151° F (66° C)

Warranty	
Warranty:	3-year warranty from date of installation; built-in warranty counter in memory

Stand-Alone Access Controller

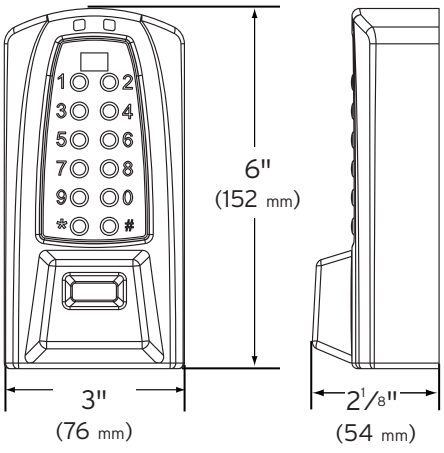

Exterior **Side View**

Optional Features

PC Software

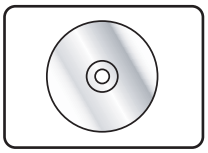

E-Plex®

5770 Stand-Alone Access Controller

Example

E 5 7 — 7 — 0 — 6 2 6 — 4 1

E 5 7	7	0	-			-	4 1
Model	Function	Locking Device		Finish			Packaging

Build the model number with the desired options

Base Model	Description	Base Price
E577062641	E5770, Stand-Alone Access Controller PIN/PROX 3,000 Access Users, 30,000 Audit Events	$960.00

Choose one option from each category

Function Options	Description	Price
7	Stand-Alone Access Controller	No Charge

Locking Device Options	Description	Price
0	No Locking Device	No Charge

Finish Options	Description	Price
605	Bright Brass (03)	Add $25.00
606	Satin Brass (04)	Add $25.00
625	Bright Chrome (026)	Add $25.00
626	Satin Chrome (26D)	No Charge
676	Black with Satin Chrome Accents	No Charge
744	Dark Bronze with Brass Accents (simulated 10B/613)	Add $100.00

Notes

E-Plex® 5770 Series Accessories (Optional)

Model Number	Description	Price
EP-EPRISE-xx-001 xx=version number. Please see kabaaccess.com/software to determine most current version number.	Enterprise Software Implementation Kit (See E-Plex Software section of this catalog for additional information)	$700.00
54561-000-41	USB PROX Reader/Enroller (Required with software above)	$440.00

Items Supplied with the Unit

- Installation Manual
- Quick Reference Guide
- Full-Scale Template
- Required Installation Hardware

E-Plex®
5786 Series

- **PIN/PROX or Dual Credential—Entry and Egress**
- **Electronic Access Control**
- **3,000 Access Codes**
- **30,000 Audit Events**
- **Access Schedules**
- **Optional Software**

Features

Access Control:	Electronic lock with dual credential capability—PIN and/or PROX card (HID, 125khz, 26 to 84-bit format). Lock is scheduled to require credentials based on security and convenience requirements. • PIN only • PROX card only • PIN + PROX card
Locking Device Options:•	American Standard Mortise: With 1 ¼" (32 mm) faceplate; without deadbolt
Number of Codes:	Multiple Users—3,000 Codes; over 100 million possible code combinations
Programming:	Locks are programmed simply via keypad using LearnLok™ Feature without any software, or with optional E-Plex Enterprise Software to manage large number of doors and users
Handing:	Non-handed; pre-assembled for left hand door installations—easily changed in the field
Key Override:	Key-in-Lever/Knob cylinders, small format interchangeable cores, large format removable cores
Scheduling:	Access schedules—Up to 16 different access schedules may be programmed into lock Holiday/Vacation—Up to 32 different holiday/vacation blocks may be programmed into lock
Operation Modes:	• PIN access • Passage—can be toggled on/off or can be pre-programmed to re-lock after a certain number of hours • Lockout
Authority Levels:	Five different levels allow you to control who has access to specific lock functions, including: Service Codes—programmed for one-time access or "come-and-go" access for 1-to-24 hours
User Parameters:	Code length—Adjustable to accept 4 to 8 digits Anti-tamper lockout—Adjustable from 3 to 9 invalid attempts with an adjustable period of 0 to 90 seconds Re-lock time—Adjustable from 2 to 20 seconds
Battery Operation:	Batteries located in mortise housing; offers quick and easy battery replacement for institutions (Four AA Alkaline batteries provide up to 180,000 cycles). Lock data is maintained if batteries fail.
Ease of Installation:	LectroBolt™ (patent pending) eliminates wiring to or through the door—no risk of pinched wires

E-Plex®
5786 Series

KABA®

Mechanical Features

Construction:	Extra heavy-duty Grade 1 lock; solid cast housings; solid cast zinc levers, tested for extensive use in indoor and outdoor applications
Numeric Keypad:	Vandal resistant, solid metal pushbuttons
Handing:	Non-handed; pre-assembled for left-hand door installation—easily changed in the field
Standard Finishes:	Satin Chrome 626 (26D) housings and levers, Black 676 housings with Satin Chrome 626 (26D) levers and accents
Optional Finishes:	Satin Brass 606 (04), Dark Bronze 744 with Brass Accents, Bright Brass 605 (03), and Bright Chrome 625 (026)
Backset:	Mortise: 2 ¾" (70 mm) backset
Latches:	¾" (19 mm) latch
Minimum Stile Required:	5" (127 mm)
Weight:	8 lbs (3.63 kg)

Key Override

Key Override:

Universal Key-in-Lever Cylinders: Includes Kaba 1599 6-pin cylinder (prepped to Kaba 90 or Schlage "C" Keyway, keyed different) and tailpieces for compatibility with:

Abloy 5277
Abloy 5477
Arrow C100
ASSA 65611
ASSA 65691
Corbin Russwin 2000-03
Kaba 1539
Kaba 1599
Kaba Gemini 4730
Kaba Peaks 1099
Marks
Medeco 20W200H1
Sargent 10 Line
Schlage 23-001
Schlage Primus 20-760

Australian:
Kaba experT 107K5 and Boyd KC286

European: Quattro S/Expert and AP2 (5 and 6-pin)

Interchangeable Cores: Small format—Best and equivalent (6 or 7-pin length)
Removable Cores: Large format—Medeco/ASSA/Yale (5 or 6-pin), Corbin Russwin, Schlage, and Sargent

Installation

Ease of Installation:	Utilizes existing mortise prep for simple installation
Door Preparation:	Easily installs on wood or metal doors; Four bolt installation; No wiring
Door Thickness:	1 ¾" (44 mm) to 2 ¼" (57 mm). Pre-assembled to accommodate doors 1 ¾" (44 mm) to 2 ⅛" (54 mm)
Items Supplied Include:	Installation manual, quick reference guide, operations manual, full-scale template, required installation hardware, and tailpiece for specified key override
Additional Items Supplied with Key-in-Lever cylinder model only:	Includes two Universal Kaba 1599 6-pin cylinder with tailpiece, four additional tail pieces, two nickel silver keys, and spare cylinder retainer

Electronic Features

Battery:	Batteries located in mortise housing; provides quick and easy battery replacement for institutions; Four AA batteries provide up to 180,000 cycles
Indicators:	Audible and visual indicators; low battery visual indicator
Audit Capability:	30,000 Events
Access Schedules:	Up to 32 holiday and vacation blocks and 16 access schedules

Certification and Testing

Accessibility Standard:	Americans with Disabilities Act (ADA)
Fire Rating:	3-hour, UL/ULC fire door rating for "A" labeled doors
Durability:	ANSI/BHMA Grade 1 Certified for Mortise Electronic Locks (A156.13 and A156.25)
Environmental:	Indoor/Outdoor Approved Front Housing: -31° F (-35° C) to + 151° F (66° C) Rear Housing: -31° F (-35° C) to + 130° F (55° C)

Warranty

Warranty:	1-year warranty from date of installation; built-in warranty counter in lock memory

Mortise

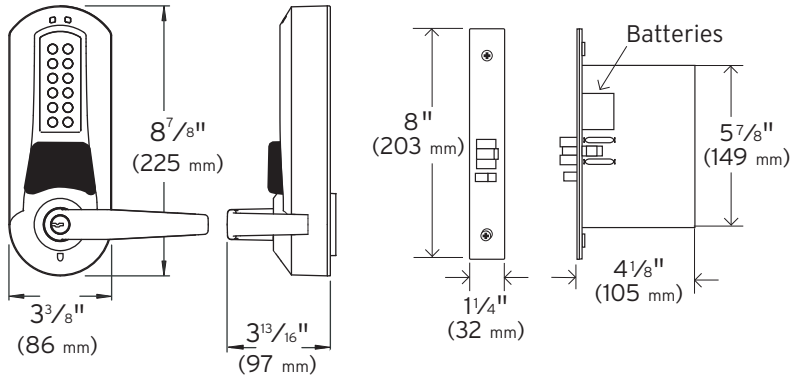

Exterior

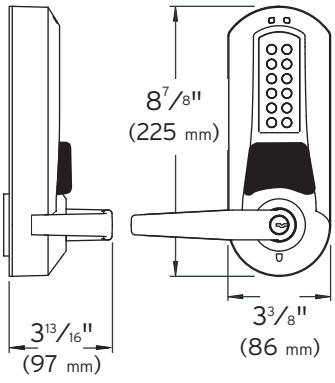

Interior

Optional Features

PC Software

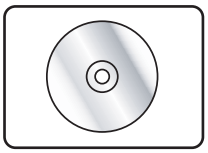

E-Plex®

5786 Series

KABA®

Example E 5 7 | 8 | 6 | X K | W L - 6 2 6 - 4 1

E 5 7	8	6		W L	-		- 4 1
Model	Function	Locking Device	Key Override+	Lever / Knob	-	Finish	- Packaging

Build the model number with the desired options

Base Model	Description	Base Price
E5786XKWL62641	E5786, Entry/Egress (Back-to-Back), 3,000 Access Codes, 30,000 Audit Events (PROX Lock)	$1,900.00

Choose one option from each category

Function Options	Description	Price
8	American Steel Mortise (ASM), Entry/Egress	No Charge

Locking Device Options +	Description	Price
6	Mortise 1¼" Face Plate No Deadbolt (Non-Handed)	No Charge

Key Override Options +, ++	Description		Price
XK	K-I-L	Kaba Cylinder (Kaba 90 Keyway) Included	No Charge
XS	K-I-L	Kaba Cylinder (Schlage "C" Keyway) Included	No Charge
B	I/C	Best and Equivalents (6 or 7-pin Length)	No Charge
C	R/C	Corbin Russwin	No Charge
M	R/C	Medeco/ASSA/Yale (5-or 6-pin Length)	No Charge
R	R/C	Sargent	No Charge
S	R/C	Schlage	No Charge

Lever/Knob Options	Description	Price
WL	Winston Lever	No Charge

Finish Options +	Description	Price
605	Bright Brass (03)	Add $50.00
606	Satin Brass (04)	Add $50.00
625	Bright Chrome (026)	Add $50.00
626	Satin Chrome (26D)	No Charge
676	Black with Satin Chrome Accents	No Charge
744	Dark Bronze with Brass Accents (simulated 10B/613)	Add $100.00

Notes

E-Plex® 5786 Series Accessories (Optional)

Model Number	Description	Price
EP-EPRISE-xx-001 xx=version number. Please see kabaaccess.com/software to determine most current version number.	Enterprise Software Implementation Kit (See E-Plex Software section of this catalog for additional information)	$700.00
54561-000-41	USB PROX Reader/Enroller (Required with software above)	$440.00

+ Options must be the same for both sides of the lock

++ Interchangeable/Removable core cylinders are not included with the lock

Items Supplied with the Lock

- Installation Manual
- Quick Reference Guide
- Full-Scale Template
- Required Installation Hardware
- Tailpiece for Specified Key Override

Additional Items Supplied with Key-in-Lever Models Only

- Universal Kaba High Security 1599 6-pin cylinder with tailpiece (includes two nickel silver keys)—per side
- Four additional tailpieces (can be used with many of the leading conventional cylinders)—per side

E-Plex®
5800 Series

KABA®

- **PIN/FIPS 201 Card or Dual Credential**
- **GSA FIPS 201 Approved**
- **Electronic Access Control**
- **3,000 Access Codes**
- **30,000 Audit Events**
- **Access Schedules**
- **ANSI/BHMA Grade-1 Certified**

Features

Access Control:	Electronic lock with dual credential capability - PIN and/or FIPS 201 or DESFire smart card (13.56 MHz). Lock is scheduled to require credentials based on security and convenience requirements. • PIN only • Smart card only • PIN + smart card
Programming:	Locks are programmed simply via keypad using LearnLok™ Feature without any software, or with optional E-Plex FIPS 201 Software to manage large number of doors and users
Number of Users and- **Audit Events in Lock:**	Users: 3,000 users Audits: 30,000 audit events
Authority Levels (6):	Authority levels allow you to control who has access to specific lock operations: • Master • Guest/Visitor User • Manager • Service User • Access User • Maintenance Unit (PDA) User
Programmed Scheduling:	Up to 16 different access schedules per lock Up to 32 different holiday/vacation blocks per lock
Passage Mode Options (3):	First manager or privileged-user in Automatic according to access schedules Manually toggled on/off at the lock keypad
System Software:	Host application PC server with multiple workstations support using Thin Client interface over network (or same machine) SQL database with critical data components encrypted for highest security Validation of credential's digital certificate performed during card enrollment Verification of cardholder status across all issued credentials performed via Online Certificate Status Protocol (OCSP) ActivIdentity (Corestreet) high assurance technology ensures fast FIPS-201 credential checking
Battery Operation:	Batteries located in interior housing cover; offers quick and easy battery replacement for institutions (Four AA Alkaline batteries provide up to 180,000 cycles). Lock data is maintained if batteries fail.
Ease of Installation:	LectroBolt™ (patent pending) eliminates wiring to or through the door – no risk of pinched wires
Lock Programming and Auditing Unit:	Laptop/netbook PC with Kaba PC M-Unit Kit

Exit Device Compatibility:	Arrow S1250	Monarch 18R/F-18R	Sargent 8888
	Arrow S3800	Precision 21/ FL 21	Von Duprin 22/22F
	Corbin Russwin 5200/5200A	Sargent 2828	Von Duprin 98/98F
	Detex 10/F10	Sargent 3828	Von Duprin 99/99F
	Dorma 9300/9300F	Sargent 8800	Yale 7100

- **Cannot be used with Mortise design or most vertical rod Exit Devices**

ATTENTION: Compatibility is subject to change if modifications are made by Exit Device manufacturers without Kaba Access Control's knowledge.

Mechanical Features

Construction:	Extra heavy-duty Grade 1 lock; cylindrical lockset, solid cast housings; solid cast zinc levers, cylindrical drive wear tested for extensive use in indoor and outdoor applications
Numeric Keypad:	Vandal resistant, solid metal pushbuttons
Handing:	Non-handed: pre-assembled for left-hand door installation—easily changed in the field
Standard Finishes:	Satin Chrome 626 (26D) housings and levers, Black 676 housings with Satin Chrome 626 (26D) levers and accents
Optional Finishes:	Satin Brass 606 (04), Dark Bronze 744 with Brass Accents, Bright Brass 605 (03), and Bright Chrome 625 (026)
Backset:	**Cylindrical:** 2 ¾" (70 mm) backset, 2 ⅜" (60 mm) backset **Mortise:** 2 ¾" (70 mm) backset **Exit Trim Model:** Varies by exit device
Latches:	Cylindrical Models: ½" (13 mm) throw latch, ¾" (19 mm) throw latch (optional) Mortise Models: ¾" (19 mm) latch, 1" (25 mm) deadbolt (optional)
Minimum Stile Required:	5" (127 mm)
Weight:	Cylindrical and Mortise Models: 8 lbs (3.63 kg) Exit Trim Models: 10 lbs (4.54 kg)

Key Override

Key Override: Universal Key-in-Lever Cylinders: Includes Kaba 1599 6-pin cylinder (prepped to Kaba 90 or Schlage "C" Keyway, keyed different) and tailpieces for compatibility with:

Abloy 5277	Kaba Gemini 4730	Australian:
Abloy 5477	Kaba Peaks 1099	Kaba experT 107K5
Arrow C100	Marks	and Boyd KC286
ASSA 65611	Medeco 20W200H1	
ASSA 65691	Sargent 10 Line	European: Quattro
Corbin Russwin 2000-03	Schlage 23-001	S/Expert and AP2
Kaba 1539	Schlage Primus 20-760	(5 and 6-pin)
Kaba 1599		

Interchangeable Cores: Small format—Best and equivalent (6 or 7-pin length)
Removable Cores: Large format—Medeco/ASSA/Yale (5 or 6-pin), Corbin Russwin, Schlage, and Sargent

E-Plex®

5800 Series

KABA®

Installation

Ease of Installation:	LectroBolt™ (patent pending) eliminates wiring to or through the door – no risk of pinched wires
Door Preparation:	Easily installs on wood or metal doors; Four bolt installation; No wiring
Door Thickness:	Cylindrical Model: 1 3/8" (35 mm) to 2 1/4" (57 mm); pre-assembled to accommodate doors 1 5/8" (41 mm) to 2" (51 mm); hardware kits included for thin and thick doors
Exit Trim and Mortise Models:	1 3/4" (44 mm) to 2 1/4" (57 mm). Pre-assembled to accommodate doors 1 3/4" (44 mm) to 2 1/8" (54 mm)
Items Supplied Include:	Installation manual, quick reference guide, operations manual, full-scale template, required installation hardware, and tailpiece for specified key override
Additional Items Supplied with Key-in-Lever cylinder model only:	Includes Universal Kaba 1599 6-pin cylinder with tailpiece, four additional tailpieces, two nickel silver keys, and spare cylinder retainer

Electronic Features

Battery:	Batteries located in interior housing; provides quick and easy battery replacement for institutions; Four AA batteries provide up to 60,000 cycles
Indicators:	Audible and visual indicators; low battery visual indicator
Audit Capability:	30,000 Events
Access Schedules:	Up to 32 holiday and vacation blocks and 16 access schedules

Certification and Testing

FIPS 201 Standard:	GSA Approved Product List (APL)
Accessibility Standard:	Americans with Disabilities Act (ADA)
Fire Rating:	3-hour, UL/ULC fire door rating for "A" labeled doors
Durability:	ANSI/BHMA Grade 1 certified (A156.25, A156.2, A156.13, A156.3)
Environmental:	Indoor/Outdoor Approved Front Housing: -31° F (-35° C) to + 151° F (66° C) Rear Housing: -31° F (-35° C) to + 130° F (55° C)

Warranty

Warranty:	3-year warranty from date of installation; built-in warranty counter in lock memory

Cylindrical

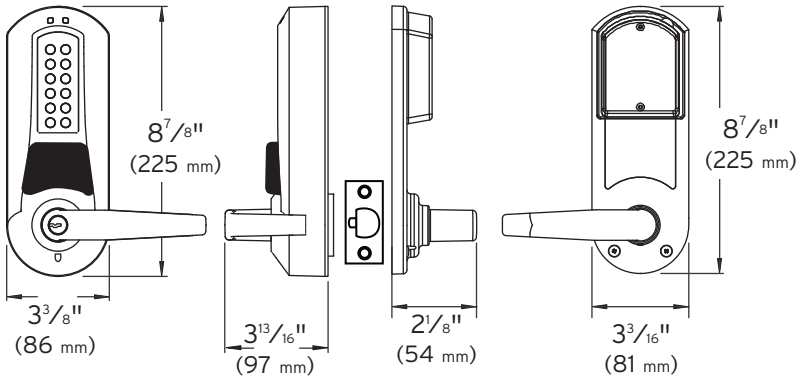

Exterior **Interior**

Optional Features

Knob

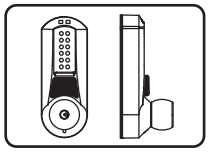

Remote Unlock

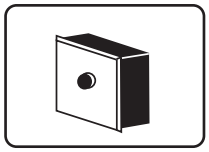

PC Software

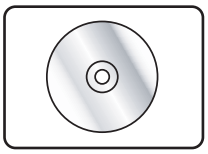

Mortise

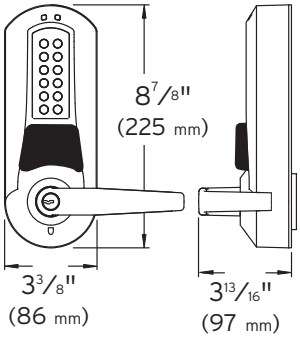

Exterior

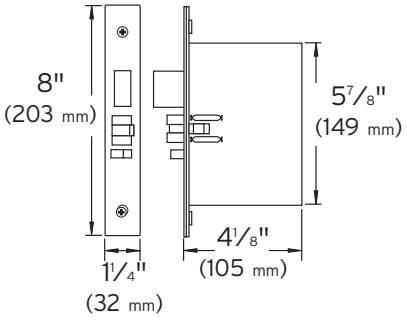

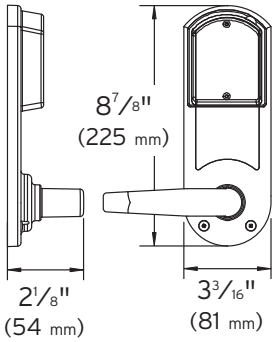

Interior

Optional Features

No Deadbolt

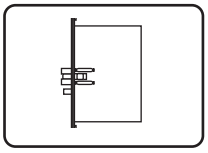

Deadbolt

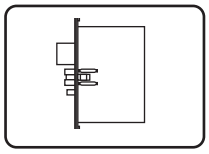

Remote Unlock

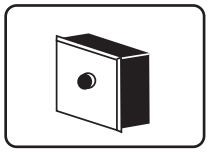

PC Software

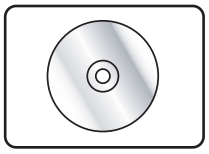

Exit Trim

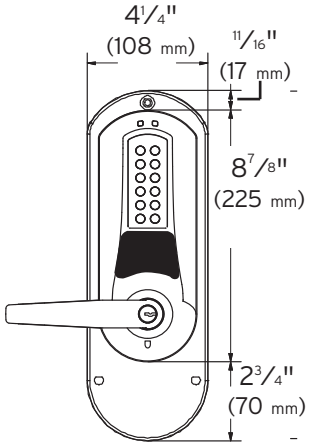

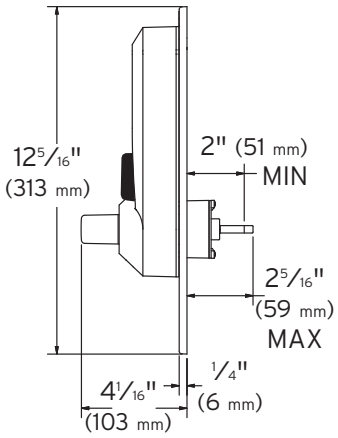

Exterior

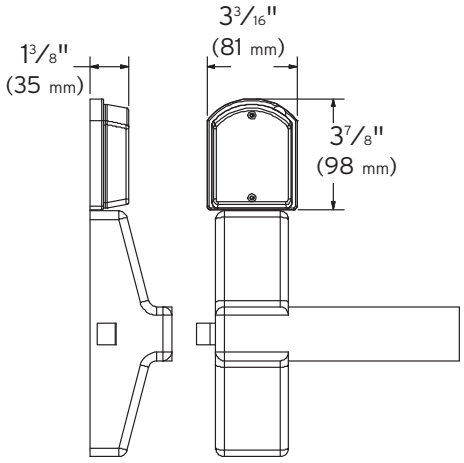

Interior

E-Plex®
5800 Series

KABA®

Example E 5 8 3 1 X K W L - ☐ - 6 2 6 - 4 1

E 5 8	☐	☐	☐☐	☐☐	- ☐ -	☐☐☐	- 4 1
Model	Function	Locking Device	Key Override	Lever / Knob	+ Optional Features	Finish	Packaging

Build the model number with the desired options

Base Model	Description	Base Price
E5831XKWL62641	E5800, Cylindrical, Key-in-Lever FIPS 201 Lock, 3,000 Access Codes, 30,000 Audit Events	$1300.00

Choose one option from each category

Function Options	Description	Price
1++	Exit Trim (E.T.)	Add $100.00
3	Cylindrical Lock (cyl)	No Charge
5	Cylindrical with Privacy (cyl)	Add $100.00
6	American Steel Mortise (ASM)	Add $120.00

Locking Device Options	Description	Price
0++	Exit Trim	No Charge
1	Cylindrical ½" (13 mm) throw latch, floating face plate 2 ¾" (70 mm) backset	No Charge
2	Cylindrical ½" (13 mm) throw latch, floating face plate 2 ⅜" (60 mm) backset	No Charge
5	Cylindrical ¾" (19 mm) throw latch, beveled face plate 2 ¾" (70 mm) backset	No Charge
3	Mortise LH – 1" (25 mm) Face Plate No Deadbolt	No Charge
4	Mortise RH – 1" (25 mm) Face Plate No Deadbolt	No Charge
8	Mortise LH – 1" (25 mm) Face Plate With Deadbolt	Add $30.00
9	Mortise RH – 1" (25 mm) Face Plate With Deadbolt	Add $30.00
6	STD Mortise 1¼" Face Plate No Deadbolt (Non-Handed)	No Charge
7	STD Mortise 1¼" Face Plate With Deadbolt (Non-Handed)	Add $30.00

Key Override Options+++	Description		Price
XK	K-I-L	Kaba Cylinder (Kaba 90 Keyway) Included	No Charge
XS	K-I-L	Kaba Cylinder (Schlage “C” Keyway) Included	No Charge
B	I/C	Best and Equivalents (6 or 7-pin Length)	No Charge
C	R/C	Corbin Russwin	No Charge
M	R/C	Medeco/ASSA/Yale (5 or 6-pin Length)	No Charge
R	R/C	Sargent	No Charge
S	R/C	Schlage	No Charge

IMPORTANT NOTICE
Kaba’s E-Plex 5800 series Stand-Alone Electronic Locks and Controllers (SACs) have been approved by a certified GSA lab to meet FIPS 201 product standards. However, we cannot guarantee that all cards claiming to meet FIPS 201 will work with our products, as we have observed some cards that have been issued that do not meet FIPS 201 specifications. This may be due to a card manufacturing defect, third party customization of the card, or damage done once the card was in circulation. It is the responsibility of the end-user Agency or Company to validate and verify that the specific credentials intended to be used with Kaba’s E5800 series Locks and Controllers are interoperable with our product. Our product warranty does not cover any replacement product or other costs due to specific cards not working with the E-Plex 5800 series products.

Lever/Knob Options	Description	Price
WL	Winston Lever	No Charge
WK	Winston Knob (available with Cylindrical only)	No Charge

Optional Features+	Description	Price
0	Remote Unlock (Not available with Exit Trim Models) Lock supplied with pigtail ready to wire to remote momentary contact switch (not included)	Add $80.00

Finish Options	Description	Price
605	Bright Brass (03)	Add $25.00
606	Satin Brass (04)	Add $25.00
625	Bright Chrome (026)	Add $25.00
626	Satin Chrome (26D)	No Charge
676	Black with Satin Chrome Accents	No Charge
744	Dark Bronze with Brass Accents (Simulated 10B/613)	Add $100.00

Notes

Software (Optional)	Description	Price
EP-GEN-FIPS-xx-001 xx=version number. Please see kabaaccess.com/software to determine most current version number.	E-Plex General FIPS Software Implementation Kit (See E-Plex Software section of this catalog for additional information)	$1,000.00
120-ENFIPS-000	USB FIPS/DESFire Card Reader/Enroller	$250.00

+ Optional Features

This field may be left blank if no optional features are required

++ Exit Device Compatibility

Arrow S1250	Monarch 18R / F-18R	Sargent 8888
Arrow S3800	Precision 21 / FL 21	Von Duprin 22 / 22F
Corbin Russwin 5200 / 5200A	Sargent 2828	Von Duprin 98 / 98F
Detex 10 / F10	Sargent 3828	Von Duprin 99 / 99F
Dorma 9300 / 9300F	Sargent 8800	Yale 7100

- **Cannot be used with mortise design or most vertical rod Exit Devices**

ATTENTION: Compatibility is subject to change if modifications are made by Exit Device manufacturers without Kaba Access Control's knowledge

+++ Interchangeable/Removable core cylinders are not included with the lock

Items Supplied with the Lock

- Installation Manual
- Quick Reference Guide
- Full-Scale Template
- Required Installation Hardware
- Tailpiece for Specified Key Override

Additional Items Supplied with Key-in-Lever Models Only

- Universal Kaba High Security 1599 6-pin cylinder with tailpiece (includes two nickel silver keys)
- Four additional tailpieces (can be used with many of the leading conventional cylinders)

E-Plex®

5870 Stand-Alone Access Controller

- **PIN/FIPS 201 Card or Dual Credential**
- **GSA FIPS 201 Approved**
- **Vandal Resistant**
- **Solid Cast Housing**
- **3,000 Access Codes**
- **30,000 Audit Events**
- **Access Schedules**
- **Works with Most Electronic Door Hardware**

Features

Access Control:	Electronic dual credential solution for dual-swing doors, parking gates, glass doors, etc. , featuring online-type functionality in a stand-alone, easy to install reader housing with keypad-- PIN and/or FIPS 201 or DESFire smart card (13.56 MHz). Lock is scheduled to require credentials based on security and convenience requirements. PIN only, smart card only, PIN + smart card.
Programming:	Locks are programmed simply via keypad using LearnLok™ Feature without any software, or with optional E-Plex FIPS 201 Software to manage large number of doors and users
Number of Users and- **Audit Events in Lock:**	Users: 3,000 users Audits: 30,000 audit events
Authority Levels (6):	Authority levels allow you to control who has access to specific lock operations: • Master • Guest/Visitor User • Manager • Service User • Access User • Maintenance Unit (PDA) User
Power:	Requires 12–24Vdc power input from standard, off-the-shelf power interface units. If power is lost, user data and lock parameters are retained in on-board memory.
Ease of Installation:	Simple, easy to install reader unit is predrilled for single gang box or wall mounting. Lockable interface controller unit enclosure is predrilled and has knockouts for simple wiring with low voltage connections directly into off-the-shelf power interface units. Product also includes a contact closure, alarm shunt output to interface with new or existing fire alarms and security systems.
Vandal Resistance:	Exclusive tamper-switch circuitry in reader housing prevents unauthorized access if unit is attacked or removed from mounting plate. If tamper is detected, the reader unit emits constant bright blue lights and all internal wires other than power are passive until unit is reset. Once reader unit is later reinstalled and/or remotely reset, PIN access is restored.

Mechanical Features

Construction:	Solid cast housing
Numeric Keypad:	Vandal resistant, solid metal pushbuttons
Standard Finishes:	Satin Chrome 626 (26D) housings, Black 676 housings with Satin Chrome 626 (26D) Buttons
Optional Finishes:	Satin Brass 606 (04), Dark Bronze 744 with Brass Buttons, Bright Brass 605 (03), and Bright Chrome 625 (026)
Weight:	5.26 lbs. (2.38 kg)

Installation

Ease of Installation:	Simple, easy to install reader unit is predrilled for single gang box or wall mounting. Lockable interface controller unit enclosure is predrilled and has knockouts for simple wiring with low voltage connections directly into off-the-shelf power interface units. Product also includes a contact closure, alarm shunt output to interface with new or existing fire alarms and security systems.
Items Supplied Include:	Installation manual, quick reference guide, operations manual, full-scale template, and required installation hardware

Electronic Features

Vandal Resistance:	Exclusive tamper-switch circuitry in reader housing prevents unauthorized access if unit is attacked or removed from mounting plate. If tamper is detected, the reader unit emits constant bright blue lights and all internal wires other than power are passive until unit is reset. Once reader unit is later reinstalled and/or remotely reset, PIN access is restored.
Indicators:	Audible and visual indicators; visual tamper indicator
Audit Capability:	30,000 Events

Environmental

Operating Range:	-31° F (-35° C) to 151° F (66° C)

Warranty

Warranty:	3-year warranty from date of installation; built-in warranty counter in memory

Stand-Alone Access Controller

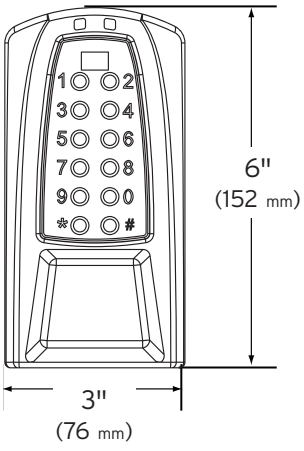

Exterior

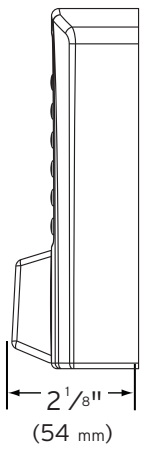

Side View

Optional Features

PC Software

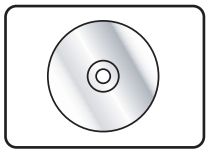

E-Plex®

5870 Stand-Alone Access Controller

Example

E 5 8 — 7 — 0 — 6 2 6 - 4 1

E 5 8	7	0	-	□ □ □	-	4 1
Model	Function	Locking Device		Finish		Packaging

Build the model number with the desired options

Base Model	Description	Base Price
E587062641	E5870, Stand-Alone Access Controller (FIPS 201) 3,000 Access Users, 30,000 Audit Events	$1,160.00

Choose one option from each category

Function Options	Description	Price
7	Stand-Alone Access Controller	No Charge

Locking Device Options	Description	Price
0	No Locking Device	No Charge

Finish Options	Description	Price
605	Bright Brass (03)	Add $25.00
606	Satin Brass (04)	Add $25.00
625	Bright Chrome (026)	Add $25.00
626	Satin Chrome (26D)	No Charge
676	Black with Satin Chrome Accents	No Charge
744	Dark Bronze with Brass Accents (simulated 10B/613)	Add $100.00

Notes

Software Optional	Description	Price
EP-GEN-FIPS-xx-001 xx=version number. Please see kabaaccess.com/software to determine most current version number.	E-Plex General FIPS Software Implementation Kit (See E-Plex Software section of this catalog for additional information)	$1,000.00
120-ENFIPS-000	USB FIPS/DESFire Card Reader/Enroller	$250.00

Items Supplied with the Unit

- Installation Manual
- Quick Reference Guide
- Full-Scale Template
- Required Installation Hardware

IMPORTANT NOTICE

Kaba's E-Plex 5800 series Stand-Alone Electronic Locks and Controllers (SACs) have been approved by a certified GSA lab to meet FIPS 201 product standards. However, we cannot guarantee that all cards claiming to meet FIPS 201 will work with our products, as we have observed some cards that have been issued that do not meet FIPS 201 specifications. This may be due to a card manufacturing defect, third party customization of the card, or damage done once the card was in circulation. It is the responsibility of the end-user Agency or Company to validate and verify that the specific credentials intended to be used with Kaba's E5800 series Locks and Controllers are interoperable with our product. Our product warranty does not cover any replacement product or other costs due to specific cards not working with the E-Plex 5800 series products.

KABA®

E-Plex®
5886 Series

- **PIN/FIPS 201 Card or Dual Credential**
- **GSA FIPS 201 Approved**
- **Electronic Access Control**
- **3,000 Access Codes**
- **30,000 Audit Events**
- **Access Schedules**
- **Optional Software**

Features

Access Control:	Electronic lock with dual credential capability - PIN and/or FIPS 201 or DESFire smart card (13.56 MHz). Lock is scheduled to require credentials based on security and convenience requirements. • PIN only • Smart card only • PIN + smart card
Number of Users and- Audit Events in Lock:	Users: 3,000 users Audits: 30,000 audit events
Programming:	Locks are programmed simply via keypad using LearnLok™ Feature without any software, or with optional E-Plex FIPS 201 Software to manage large number of doors and users
Handing:	Non-handed; pre-assembled for left hand door installations—easily changed in the field
Key Override:	Key-in-Lever/Knob cylinders, small format interchangeable cores, large format removable cores
Scheduling:	Access schedules—Up to 16 different access schedules may be programmed into lock Holiday/Vacation—Up to 32 different holiday/vacation blocks may be programmed into lock
Operation Modes:	• PIN access • Passage—can be toggled on/off or can be pre-programmed to re-lock after a certain number of hours • Lockout
Authority Levels:	Five different levels allow you to control who has access to specific lock functions, including: Service Codes—programmed for one-time access or "come-and-go" access for 1-to-24 hours
User Parameters:	Code length—Adjustable to accept 4 to 8 digits Anti-tamper lockout—Adjustable from 3 to 9 invalid attempts with an adjustable period of 0 to 90 seconds Re-lock time—Adjustable from 2 to 20 seconds
Battery Operation:	Batteries located in mortise housing; offers quick and easy battery replacement for institutions (Four AA Alkaline batteries provide up to 180,000 cycles). Lock data is maintained if batteries fail.
Ease of Installation:	LectroBolt™ (patent pending) eliminates wiring to or through the door—no risk of pinched wires
Lock Programming and Auditing Unit:	Laptop/netbook PC with Kaba PC M-Unit Kit

E-Plex®
5886 Series

KABA®

Mechanical Features

Construction:	Extra heavy-duty Grade 1 lock; solid cast housings; solid cast zinc levers, tested for extensive use in indoor and outdoor applications
Numeric Keypad:	Vandal resistant, solid metal pushbuttons
Handing:	Non-handed; pre-assembled for left-hand door installation—easily changed in the field
Standard Finishes:	Satin Chrome 626 (26D) housings and levers, Black 676 housings with Satin Chrome 626 (26D) levers and accents
Optional Finishes:	Satin Brass 606 (04), Dark Bronze 744 with Brass Accents, Bright Brass 605 (03), and Bright Chrome 625 (026)
Backset:	Mortise: 2 ¾" (70 mm) backset
Latches:	¾" (19 mm) latch
Minimum Stile Required:	5" (127 mm)
Weight:	8 lbs (3.63 kg)

Key Override

Key Override: Universal Key-in-Lever Cylinders: Includes Kaba 1599 6-pin cylinder (prepped to Kaba 90 or Schlage "C" Keyway, keyed different) and tailpieces for compatibility with:

Abloy 5277
Abloy 5477
Arrow C100
ASSA 65611
ASSA 65691
Corbin Russwin 2000-03
Kaba 1539
Kaba 1599
Kaba Gemini 4730
Kaba Peaks 1099
Marks
Medeco 20W200H1
Sargent 10 Line
Schlage 23-001
Schlage Primus 20-760
Australian:
Kaba experT 107K5 and Boyd KC286
European: Quattro S/Expert and AP2 (5 and 6-pin)

Interchangeable Cores: Small format—Best and equivalent (6 or 7-pin length)
Removable Cores: Large format—Medeco/ASSA/Yale (5 or 6-pin), Corbin Russwin, Schlage, and Sargent

Installation

Ease of Installation:	Utilizes existing mortise prep for simple installation
Door Preparation:	Easily installs on wood or metal doors; Four bolt installation; No wiring
Door Thickness:	1 ¾" (44 mm) to 2 ¼" (57 mm). Pre-assembled to accommodate doors 1 ¾" (44 mm) to 2 ⅛" (54 mm)
Items Supplied Include:	Installation manual, quick reference guide, operations manual, full-scale template, required installation hardware, and tailpiece for specified key override
Additional Items Supplied with Key-in-Lever cylinder model only:	Includes two Universal Kaba 1599 6-pin cylinder with tailpiece, four additional tail pieces, two nickel silver keys, and spare cylinder retainer

Electronic Features

Battery:	Batteries located in mortise housing; provides quick and easy battery replacement for institutions; Four AA batteries provide up to 180,000 cycles
Indicators:	Audible and visual indicators; low battery visual indicator
Audit Capability:	30,000 Events
Access Schedules:	Up to 32 holiday and vacation blocks and 16 access schedules

Certification and Testing

FIPS 201 Standard:	GSA Approved Product List (APL)
Accessibility Standard:	Americans with Disabilities Act (ADA)
Fire Rating:	3-hour, UL/ULC fire door rating for "A" labeled doors
Durability:	ANSI/BHMA Grade 1 Certified for Mortise Electronic Locks (A156.13 and A156.25)
Environmental:	Indoor/Outdoor Approved Front Housing: -31° F (-35° C) to + 151° F (66° C) Rear Housing: -31° F (-35° C) to + 130° F (55° C)

Warranty

Warranty:	1-year warranty from date of installation; built-in warranty counter in lock memory

Mortise

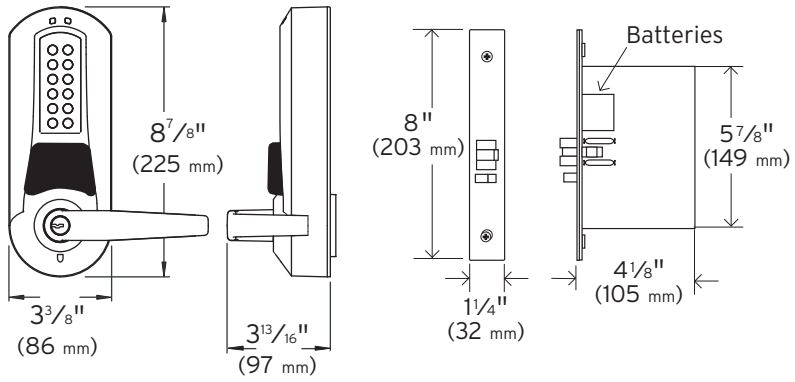

Exterior

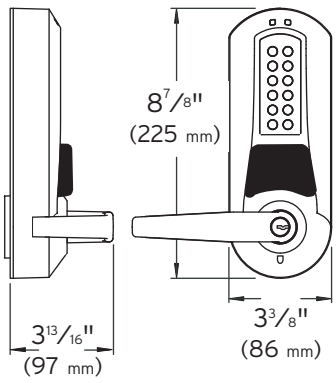

Interior

Optional Features

PC Software

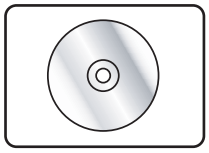

E-Plex®
5886 Series

KABA®

Example E 5 8 | 8 | 6 | X K | W L - 6 2 6 - 4 1

Model	Function	Locking Device	Key Override+	Lever / Knob		Finish	Packaging
E 5 8	8	6		W L	-		- 4 1

Build the model number with the desired options

Base Model	Description	Base Price
E5886XKWL62641	E5886, Entry/Egress (Back-to-Back), 3,000 Access Codes, 30,000 Audit Events (FIPS 201 Lock)	$2,000.00

Choose one option from each category

Function Options	Description	Price
8	American Steel Mortise (ASM), Entry/Egress	No Charge

Locking Device Options +	Description	Price
6	Mortise 1¼" Face Plate No Deadbolt (Non-Handed)	No Charge

Key Override Options +, ++	Description		Price
XK	K-I-L	Kaba Cylinder (Kaba 90 Keyway) Included	No Charge
XS	K-I-L	Kaba Cylinder (Schlage "C" Keyway) Included	No Charge
B	I/C	Best and Equivalents (6 or 7-pin Length)	No Charge
C	R/C	Corbin Russwin	No Charge
M	R/C	Medeco/ASSA/Yale (5-or 6-pin Length)	No Charge
R	R/C	Sargent	No Charge
S	R/C	Schlage	No Charge

Lever/Knob Options	Description	Price
WL	Winston Lever	No Charge

Finish Options +	Description	Price
605	Bright Brass (03)	Add $50.00
606	Satin Brass (04)	Add $50.00
625	Bright Chrome (026)	Add $50.00
626	Satin Chrome (26D)	No Charge
676	Black with Satin Chrome Accents	No Charge
744	Dark Bronze with Brass Accents (simulated 10B/613)	Add $100.00

IMPORTANT NOTICE
Kaba's E-Plex 5800 series Stand-Alone Electronic Locks and Controllers (SACs) have been approved by a certified GSA lab to meet FIPS 201 product standards. However, we cannot guarantee that all cards claiming to meet FIPS 201 will work with our products, as we have observed some cards that have been issued that do not meet FIPS 201 specifications. This may be due to a card manufacturing defect, third party customization of the card, or damage done once the card was in circulation. It is the responsibility of the end-user Agency or Company to validate and verify that the specific credentials intended to be used with Kaba's E5800 series Locks and Controllers are interoperable with our product. Our product warranty does not cover any replacement product or other costs due to specific cards not working with the E-Plex 5800 series products.

Notes

Software (Optional)	Description	Price
EP-GEN-FIPS-xx-001 xx=version number. Please see kabaaccess.com/software to determine most current version number.	E-Plex General FIPS Software Implementation Kit (See E-Plex Software section of this catalog for additional information)	$1,000.00
120-ENFIPS-000	USB FIPS/DESFire Card Reader/Enroller	$250.00

+ Options must be the same for both sides of the lock

++ Interchangeable/Removable core cylinders are not included with the lock

Items Supplied with the Lock

- Installation Manual
- Quick Reference Guide
- Full-Scale Template
- Required Installation Hardware
- Tailpiece for Specified Key Override

Additional Items Supplied with Key-in-Lever Models Only

- Universal Kaba High Security 1599 6-pin cylinder with tailpiece (includes two nickel silver keys)—per side
- Four additional tailpieces (can be used with many of the leading conventional cylinders)—per side

E-Plex®
Standard PC Software

- **Simple Microsoft Excel™ Based Software**
- **Manages up to 300 Users Per Door**
- **Up to 10,000 Doors Per Site**
- **Manage Multiple Sites**
- **Users are Quickly Added, Deleted, or Suspended**
- **Password Protection Ensures Security**

PLEASE READ

Since computer hardware, operating systems and software features frequently change due to advances in technology, the information included here represents general information regarding the features included in this software product. For the most up-to-date software information, including additional features, PC requirements and operating system compatibility, please refer to www.kabaaccess.com/software.

Software	
Easy-to-Use:	• Point-and-click Microsoft Excel™ based software requires no special knowledge to operate • One software supports both the E-Plex 5000 and E-Plex 3000 Series locks • Software provides simple on-screen instructions • Instructions guide you through set-up, managing users and doors and establishing authority levels
Capabilities:	• Easily manages up to 300 unique Access Codes (PINs) per door • Manages up to 10,000 doors per site • Users and doors are quickly added and deleted • Includes optional built-in random PIN code generator
Simplified Set-Up:	• Predefined spreadsheet templates simplify set-up and data input • Lock settings and related parameters are easily cloned, permitting quick multi-lock installations
Data Protection:	Passwords ensure integrity of system and data

Lock Communication	
Data Transfer:	• Locks programmed and audits downloaded with handheld M-Unit (Maintenance Unit) • Communicates through infrared data transfer—just point your M-Unit at the lock's transfer window
LED Indicators:	Provide visual confirmation during data transfer
Battery Life:	M-Unit quickly reads and displays lock's battery status without having to access door

Audit	
Audit Information:	Locks record last 9,000 events to provide increased accountability Audit includes records of mechanical key override use
Data:	Audits are down-loaded to Excel™ spreadsheets where information is easily analyzed, sorted or printed according to your needs—unlike the "canned" pre-programmed audits found in most access control systems

Authority Levels

Levels:	Five levels control who has access to specific lock functions **Master–**programs all lock functions (1 Master per system) **Manager–**programs most lock functions **Access User–**authorized to gain access through PIN only **Service Level–**provides one time access or "come-and-go" access for 1 to 24 hours–perfect for service personnel, meeting rooms and rental spaces **Communication Level–**only authorized to program, send/receive audit files and check battery status without access to door or the ability to view access codes (1 per System)
Assignment:	Each site is assigned one Master Level and one Communications Level–remaining 299 codes set to any authority level

Operation Modes

Flexibility:	Three modes to accommodate security and convenience needs during the business day **PIN Access–**Access granted when valid PIN is entered **Passage–**can be toggled on/off or can be pre-programmed to re-lock after a certain number of hours, from 1 to 24 hours. Additionally, for the E-Plex 3000 locks, you can also have a "latch holdback" similar to passage mode. **Lockout–**denies access to all users except for Master code and mechanical key-override

Customizable User Preferences

Code Length:	Accepts 4 to 8 digits
Anti-Tamper Lockout:	Adjustable from 0 to 90 seconds–activation set for 3 to 9 invalid entry attempts
Re-Lock Time:	Adjustable from 2 to 20 seconds

Compatibility

PC Hardware:	IBM compatible PC with Microsoft Windows For the most current information regarding this specification, please refer to **www.kabaaccess.com/software**
Operating System:	Microsoft Windows (not supplied) For the most current information regarding this specification, please refer to **www.kabaaccess.com/software**
Microsoft Excel™:	For the most current information regarding this specification, please refer to **www.kabaaccess.com/software**
Portable Maintenance Unit (M-Unit):	Netbook or a mini Laptop PC with Microsoft Windows For the most current information regarding this specification, please refer to **www.kabaaccess.com/software** Note: The PC M-Unit (Laptop or Netbook) requires Kaba's E-Plex M-Unit Kit as an accessory; the kit contains a USB flash drive and an IrDA adaptor

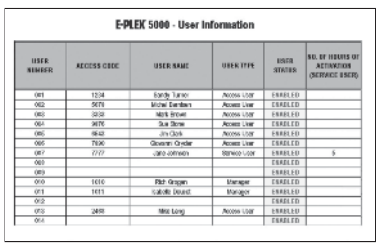

E-Plex®

Enterprise Software

- **Stand-Alone or Networkable**
- **PC Thin Client/Server Architecture for Seamless Networking and Integration**
- **SQL Database with Data Encryption for Ultimate Database Security**
- **Manages Up to 3,000 Users Per Door**
- **Up to 10,000 Doors Per Site**
- **Manage Multiple Sites**
- **16 Access Schedules Per Door**
- **32 Holiday/Vacation Blocks**
- **Visitor Management**
- **Clone Users/Clone Doors**

PLEASE READ

Since computer hardware, operating systems and software features frequently change due to advances in technology, the information included here represents general information regarding the features included in this software product. For the most up-to-date software information, including additional features, PC requirements and operating system compatibility, please refer to www.kabaaccess.com/software.

Software

Description:	The E-Plex Enterprise software is used with the E-Plex 5200/5600/5700 family of "standard" door locks and their equivalent Stand-Alone Access Controllers (SACs), and in E-Plex 3200/3600/3700 family of "narrow stile" locks. The E5200/3200 are single credential PIN access only locks. The E5700 and 3700 are 125 KHz PROX based dual credential locks. The E5200/3200 are single credential PIN access only locks. The E5600/3600 are smart card based dual credential locks. For updated information on compatibility of specific locks/controllers with software versions, please refer to www.kabaaccess.com/software.
Capabilities:	• Easily manages up to 3,000 users per lock; unlimited users in the database • Maintains up to 30,000 audit events in each lock including emergency mechanical override key usage for tracking purposes • 16 access schedules per lock; unlimited schedules in the database • 32 holidays/vacations per lock; unlimited holidays in the database • Guest/Visitor management with programmable expiry from 1 day to a year • Very flexible management of Service users who have PIN only access—Service users can have either one time access only, or 1 through 96 hour expiry access, or access with no expiry • Can quickly assign a new user to multiple doors, or assign multiple users to one door with the use of Access Groups concept, thus saving enormous data entry at the PC by the operator • Can import and export thousands of user profile records (names, Smart Card or PROX card IDs and/or PINs) from/to an external database source for managing large user profiles • Dual database feature allows users to have PROX card IDs and Smart Card IDs, thus enabling end-users to manage both PROX locks and Smart Card locks simultaneously. • Each customer site's computer database, as well as data in the locks and the handheld programming/auditing unit (M-Unit) are all fully protected with the site's unique internal communications key, maintained by the software for utmost data integrity and security • Extensive Report generation including Lock Audits, Operator Activity at PC, Access Groups, Access Schedules, Users by Door, and Doors by User, User ID cards, etc.
Architecture & Database:	• Server/Client based, runs either in Standalone mode on a single PC or in a networked environment on a server PC and multiple client PCs • Robust SQL based database using encryption to protect and manage securely all E-Plex user-lock related system database

Access Credential:	Single Credential—PIN only, or Single Credential—Card only, or Dual Credential—PIN followed by Card
E3600/5600 Smart Cards Supported:	Philips (Mifare and DESFire) and HID (iClass) 13.56 mHz smart cards per ISO 14443 A and B.
E3700/5700 Prox Cards Supported:	Any HID compatible 125 KHz PROX RFID cards with wiegand bit format ranging between the standard 26 bits and up to 84 bits
ID Card Enroller:	pcProx (by RF Ideas Inc) PROX card reader/enroller or Smart Card enroller required

Authority Levels

Master:	One global Master per entire system; 24/7 access to all locks with no schedule or lockout restrictions; can also program and audit locks
Manager:	Schedule based access—with no expiry; can also program and audit locks
Access User:	Schedule based access; can only access locks—with no expiry
Guest/Visitor:	Schedule based access; can only access locks—with maximum 1 year expiry
Service:	24/7 PIN only access—one time access, or 1 through 96 hour expiry access, or no expiry access
M-Unit (Data Transfer):	24/7 data transfer capability (programming and/or auditing) of locks on site only; no entry access to any locks on site allowed

Operation Modes

Manual Passage:	Toggle passage mode on/off at lock keypad by the Master or the Manager(s)
Scheduled Access:	Access granted per schedules and access privileges
First "Privileged User" In Passage:	Lock enters passage mode after a "privileged" user or manager opens lock at, or after the start of scheduled access start time
Auto Passage:	Lock enters passage mode automatically at the start of scheduled access start time
Lockout:	Only the Master or the emergency mechanical key can override the lockout

PC, Operating System and M-Unit Handheld Requirements

PC Hardware:	• IBM compatible PC with Microsoft Windows For the most current information regarding this specification, please refer to **www.kabaaccess.com/software**
Database Backup Media (Optional):	• USB Memory drive, or CD Writer, or Network drive, etc.
Portable Maintenance Unit (M-Unit):	• Netbook or a mini Laptop PC with Windows For the most current information regarding this specification, please refer to **www.kabaaccess.com/software** Note: The PC M-Unit (Laptop or Netbook) requires Kaba's E-Plex M-Unit Kit as an accessory; the kit contains a USB flash drive and an IrDA adaptor
Operating System:	• Microsoft Windows For the most current information regarding this specification, please refer to **www.kabaaccess.com/software**

E-Plex®

FIPS-201 Software

- **FIPS-201 Compliant Access Control System Software**
- **PC Thin Client/Server Architecture for Seamless Networking and Integration**
- **SQL Database with Data Encryption for Ultimate Database Security**
- **High Security FIPS-201 Card Enrollment**
  – Validation of Card with Card Issuer's Private PIN and Digital Certificate
- **Manages Up to 3,000 Users Per Door**
- **Up to 10,000 Doors Per Site**
- **16 Access Schedules Per Door**
- **32 Holiday/Vacation Blocks**

PLEASE READ

Since computer hardware, operating systems and software features frequently change due to advances in technology, the information included here represents general information regarding the features included in this software product. For the most up-to-date software information, including additional features, PC requirements and operating system compatibility, please refer to www.kabaaccess.com/software.

Software	
Description:	• Server/Client architecture based software, runs in stand-alone or in networked environment • Robust SQL based database management for high security with encryption • Processes and authenticates FIPS-201 (Federal Information Processing Standard, Version 2.01) compliant U.S. Government mandated (HSPD) and radio frequency smart cards as user ID cards
Capabilities:	• Easily manages up to 3,000 users per lock; unlimited users in the software database • Manages up to 16 access schedules per lock; unlimited schedules in the software database • Manages up to 32 holidays/vacations blocks per lock; unlimited holidays/vacations in the software database • Guest/visitor management with programmable expiry using Philips DESFire read/write cards • Service users can be programmed for one shot or "come-and-go" access for 1 to 96 hours—using DESFire cards • Lock settings and related parameters are easily cloned, permitting quick multi-lock installations • Access group management to quickly assign a very large number of users to a door or vise versa • Temporary user card management for lost card situations using DESFire cards • Manual and Automatic Passage modes
Data Protection:	Passwords unique site key and SQL database ensure integrity of system and data
Access Granting Credentials:	Card only (FIPS-201 compliant or DESFire card) Dual credential—PIN followed by Card
Personal ID Verification Interface:	Contactless Interface ISO 14443A/B ID Card Enrolling Station: Read/Write Enroller that supports both (ISO7816-4) Contact interface and (ISO 1443A) Contactless Interface
ID Card Enrolling Station:	Read/Write Enroller that supports both (ISO 7816-4) Contact Interface and (ISO 1443A) Contactless Interface
Lock Programming & Auditing Unit:	Any Windows XP Home OS or up-based Network or Laptop PC with Kaba-supplied IrDa interface kit (included with FIPS 201 software)
Number of Users & Audit Events in Lock:	Users: 3,000 users Audits: 30,000 audit events

Reports	
Audit:	Locks record last 30,000 events to provide increased accountability Audit also records mechanical key override use
Report Options:	User Report by Doors, Door Report By Users, System Operator Report, Audit of PC Activity, Access Schedules Report, Holiday/Vacations Report, Access Groups Reports, etc.

Authority Levels	
Master:	One global Master per entire system; 24/7 access to all locks with no schedule or lockout restrictions; can also program and audit locks
Manager:	Schedule based access—with no expiry; can also program and audit locks
Access User:	Schedule based access; can only access locks—with no expiry
Guest/Visitor:	Schedule based access; can only access locks—with maximum 1 year expiry
Service:	24/7 PIN only access—one time access, or 1 through 96 hour expiry access, or no expiry access
M-Unit (Data Transfer):	24/7 data transfer capability (programming and/or auditing) of locks on site only; no entry access to any locks on site allowed

Operation Modes	
Manual Passage:	Toggle passage mode on/off at lock keypad by the Master or the Manager(s)
Scheduled Access:	Access granted per schedules and access privileges
First "Privileged User" In Passage:	Lock enters passage mode after a "privileged" user or manager opens lock at, or after the start of scheduled access start time
Auto Passage:	Lock enters passage mode automatically at the start of scheduled access start time
Lockout:	Only the Master or the emergency mechanical key can override the lockout

PC, Operating System and M-Unit Handheld Requirements	
PC Hardware:	• IBM compatible PC with Microsoft Windows For the most current information regarding this specification, please refer to **www.kabaaccess.com/software**
Database Backup Media (Optional):	• USB Memory drive, or CD Writer, or Network drive, etc.
Portable Maintenance Unit (M-Unit):	• Netbook or a mini Laptop PC with Windows For the most current information regarding this specification, please refer to **www.kabaaccess.com/software** Note: The PC M-Unit (Laptop or Netbook) requires Kaba's E-Plex M-Unit Kit as an accessory; the kit contains a USB flash drive and an IrDA adaptor
Operating System:	• Microsoft Windows For the most current information regarding this specification, please refer to **www.kabaaccess.com/software**
Smartcard Enroller (Reader/Writer):	For the most current information regarding this specification, please refer to **www.kabaaccess.com/software**

****IMPORTANT NOTICE**
Kaba's E-Plex 5800 series Stand-Alone Electronic Locks and Controllers (SACs) have been approved by a certified GSA lab to meet FIPS 201 product standards. However, we cannot guarantee that all cards claiming to meet FIPS 201 will work with our products, as we have observed some cards that have been issued that do not meet FIPS 201 specifications. This may be due to a card manufacturing defect, third party customization of the card, or damage done once the card was in circulation. It is the responsibility of the end-user Agency or Company to validate and verify that the specific credentials intended to be used with Kaba's E5800 series Locks and Controllers are interoperable with our product. Our product warranty does not cover any replacement product or other costs due to specific cards not working with the E-Plex 5800 series products.

E-Plex® Software

Item	Software Kits	Description	Price
	EP-MU-COM-001	E-PLEX M-Unit Kit required when using laptop or netbook PCs as lock communication devices includes IrDA>USB adaptor, USB extension cable, Getting Started Guide, and USB drive with PC M-Unit software and electronic copy of User Manual. (Included in Software Implementation Kits below)	$175.00
	EP-STD-xx-001 xx=version number. Please see kabaaccess.com/software to determine most current version number.	E-PLEX Standard Software Implementation Kit used with E3000/ 5000 series locks includes software CD for MS Windows based PC and EP-MU-COM-001 kit above for use with a laptop or netbook PC as lock communication device.	$500.00
	EP-EPRISE-xx-001 xx=version number. Please see kabaaccess.com/software to determine most current version number.	E-Plex Enterprise Software Implementation Kit includes Enterprise software CD for windows based PC and EP-MU-COM-001 kit above for use with a laptop or netbook PC as lock communication device. For updated information on compatibility of specific locks/controllers with software versions, please refer to www.kabaaccess.com/software.	$700.00
	EP-GEN-FIPS-xx-001 xx=version number. Please see kabaaccess.com/software to determine most current version number.	**E-PLEX General FIPS Software Implementation Kit used with E5800 series locks and controllers includes software CD for MS Windows based PC and EP-MU-COM-001 kit above for use with a laptop or netbook PC as lock communication device.	$1,000.00

****IMPORTANT NOTICE**
Kaba's E-Plex 5800 series Stand-Alone Electronic Locks and Controllers (SACs) have been approved by a certified GSA lab to meet FIPS 201 product standards. However, we cannot guarantee that all cards claiming to meet FIPS 201 will work with our products, as we have observed some cards that have been issued that do not meet FIPS 201 specifications. This may be due to a card manufacturing defect, third party customization of the card, or damage done once the card was in circulation. It is the responsibility of the end-user Agency or Company to validate and verify that the specific credentials intended to be used with Kaba's E5800 series Locks and Controllers are interoperable with our product. Our product warranty does not cover any replacement product or other costs due to specific cards not working with the E-Plex 5800 series products.

KABA®

Notes

E-Plex® 2000 Series Accessories

Item	Model Number	Description	Price
	061-510201-630	Door Filler Plate, 14" (356 mm) x 4 5/8" (117 mm) – Stainless Steel	$56.00
	061-510201-906	Door Filler Plate, 14" (356 mm) x 4 5/8" (117 mm) – Satin Brass	$56.00
	061-510362-630	Door Filler Plate, 10 1/16" (256 mm) x 3 3/4" (95 mm) – Stainless Steel	$45.00
	061-510362-906	Door Filler Plate, 10 1/16" (256 mm) x 3 3/4" (95 mm) – Satin Brass	$45.00
	EP2000 ACLMT	E-Plex 2000 Acrylic Mount	$265.00
	203059-000-41	E-Plex 2000 Wood Mount	$143.00
	062-511915	Security Screw Kit (Includes Bit)	$5.00
	204022-000-01	Latch Extension Assembly converts to 3 3/4" (95 mm) Backset	$30.00
	204023-000-01	Latch Extension Assembly converts to 5" (130 mm) Backset	$26.00
	062-510189-626	Thick Door Kit, 2 1/2" – 3 3/4" (64 mm – 95 mm) – Satin Chrome	$10.00
	062-510189-606	Thick Door Kit, 2 1/2" – 3 3/4" (64 mm – 95 mm) – Satin Brass	$10.00
	201484-26D-01	Best Equivalent Small Format Interchangeable Core, Satin Chrome (626)	$55.00
	201484-03-01	Best Equivalent Small Format Interchangeable Core, Bright Brass (605)	$55.00

E-Plex® 3x00 Series Accessories

Item	Model Number	Description	Price
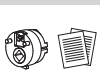	75262-000-01	Deadlatch (E3065) to Deadbolt (E3066) Conversion Kit Includes cam, template, and instructions	$50.00
	75271-000-01	Dead Lock (E3066) to Deadlatch (E3065) Conversion Kit Includes cam, template, and instructions	$50.00
	64793-626-01	Deadlatch Dress Plate Kit, Covers Old Prep from Simplex 3000, Simplex 3100, Schlage King Cobra, and Trilogy DL1200/1300—Satin Chrome; Use with E3065 Lock	$80.00

E-Plex® 3x00 Series Accessories (continued)

Item	Model Number	Description	Price
	64793-744-01	Deadlatch Dress Plate Kit, Covers Old Prep from Simplex 3000, Simplex 3100, Schlage King Cobra, and Trilogy DL1200/1300—Dark Bronze; Use with E3065 Lock	$80.00
	64794-626-01	Dead Lock Dress Plate Kit, Covers Old Prep from Simplex 3000, Simplex 3100, Schlage King Cobra, and Trilogy DL1200/1300—Satin Chrome; Use with E3066 Lock	$80.00
	64794-744-01	Dead Lock Dress Plate Kit, Covers Old Prep from Simplex 3000, Simplex 3100, Schlage King Cobra, and Trilogy DL1200/1300—Dark Bronze; Use with E3066 Lock	$80.00
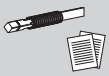	64802-000-01	E3000 Series Exit Trim Adapter Kit (Fits Arrow 10/51800, Corbin ED5200A, Detex Advantex 10/40, DCI 1200A/1300A, Dorma 9300/F9300, Hager 4700R/4700RF, Precision 2100/FL2100, and Von Duprin 33/35A)	$50.00
	75268-626	E3000 Aluminum Mount Deadlatch—Satin Chrome (E3065 Lock and Adams Rite Hardware Not Included)	$180.00

E-Plex® 5x00 Series Accessories

Item	Wrap Plates/ Latch Extensions	Description	Price
	204232-26D-41	15" Wrap Plate – Satin Chrome	$85.00
	204232-03-41	15" Wrap Plate – Bright Brass	$85.00
	204231-26D-41	10.5" Wrap Plate – Satin Chrome	$60.00
	204231-03-41	10.5" Wrap Plate – Bright Brass	$60.00
	204022-000-01	Latch Extension Assembly converts to 3 3/4" (95 mm) Backset	$30.00
	204023-000-01	Latch Extension Assembly converts to 5" (130 mm) Backset	$26.00
	54720-000-01	Mortise Mounting Bracket Kit for Hollow Metal Doors	$15.00
	50567701-000-01	Mortise Stabilizer for Hollow Metal Doors	$20.00
	201484-26D-01	Best Equivalent Small Format Interchangeable Core, Satin Chrome (626)	$55.00
	201484-03-01	Best Equivalent Small Format Interchangeable Core, Bright Brass (605)	$55.00

Item	Power Options	Description	Price
	7540900001	High Capacity Battery Kit, E5x00 Series, includes 4 c-cell battery pack	$80.00
	7541000001	12-24 VDC Power Interface Kit, E5x00 Series	$100.00

E-Plex® 5x00 Series Accessories (continued)

Item	Installation Jig	Description	Price
	64684-26D-01	Installation Jig for E-Plex 5000 Series	$350.00

Item	Display Mounts*	Description	Price
	203044-000-41	E-Plex 5x00 Cylindrical–Wood Mount	$143.00
	203056-000-41	E-Plex 5x00 Exit Trim–Wood Mount	$143.00
	203058-000-41	E-Plex 5x00 Mortise–Wood Mount	$143.00
	EP5000 ACLMT	E-Plex 5x00 Cylindrical–Acrylic Mount	$265.00

*Mounts do not include lock

General E-Plex® Accessories

Item	Reader-Enrollers	Description	Price
	54561000	USB Prox Reader/Enroller for use with E3700/5700 Series Locks and Controllers and E-PLEX Enterprise Software	$440.00
	120-ENSC-000	USB SmartCard Reader/Enroller for use with E3600/5600 Series Locks and E-PLEX Enterprise Software	$440.00
	120-ENFIPS-000	**USB FIPS/DESFire SmartCard Reader/Enroller for use with E5800 Series Locks and Controllers and E-PLEX FIPS Software	$200.00

Item	Proximity Credentials/Tokens	Description	Price
	065-101066	HID Proxcard II Proximity Access Card #1326M Not Printable, with slot (minimum order of 100)	$6.50
	065-507143	HID ISO Prox II Card (PVC-31 mils) #1386 Printable, no slot (minimum order of 100)	$8.00
	065-507144	HID DuoProx (PVC-31 mils) High C / Proximity #1336 Printable, no slot (minimum order of 100)	$8.50
	120-508051	HID Prox Key II #1346 (FOB) (minimum order of 100)	$8.50
	065-511072	MicroProx Tag Proximity #1391 (Adhesive Backed Disc) (minimum order of 100)	$5.50

****IMPORTANT NOTICE**
Kaba's E-Plex 5800 series Stand-Alone Electronic Locks and Controllers (SACs) have been approved by a certified GSA lab to meet FIPS 201 product standards. However, we cannot guarantee that all cards claiming to meet FIPS 201 will work with our products, as we have observed some cards that have been issued that do not meet FIPS 201 specifications. This may be due to a card manufacturing defect, third party customization of the card, or damage done once the card was in circulation. It is the responsibility of the end-user Agency or Company to validate and verify that the specific credentials intended to be used with Kaba's E5800 series Locks and Controllers are interoperable with our product. Our product warranty does not cover any replacement product or other costs due to specific cards not working with the E-Plex 5800 series products.

General E-Plex® Accessories (continued)

Item	Smart Card Credentials	Description	Price
	352-DESFIR-04K	DESFire 4k SmartCard for use with E5600/5800 Series Locks and Controllers (minimum order of 100)	$5.00
	RFO-F1001-B790	MIFARE 1k SmartCard for use with E5600 Series Locks and Controllers (minimum order of 100)	$2.50
	352-ICLASS-02K	HID iClass 2k SmartCard for use with E5600 Series Locks and Controllers (minimum order of 100)	$6.00

Item	Card Holder	Description	Price
	P203-10	Retractable Card Holder – (priced per 10-pack)	$40.00

Item	Weather Cover	Description	Price
	54644-000-41	Weather Cover E-Plex 5x00	$50.00

PowerLever®

1550 Series

- **PIN & ID**
- **20 Users**
- **No Batteries**
- **Easy to Maintain**
- **ANSI/BHMA Grade-1 Certified**

Features

Access Control:	Electronic lock—eliminates problems and costs associated with issuing, controlling and collecting keys
Operation & Maintenance:	No batteries means very little maintenance
Locking Device Option:	Cylindrical latch with 3-hour UL/ULC fire rating
Number of Codes:	Multiple Codes—Up-to-20 unique access codes
Programming:	Easy to program at the keypad
Handing:	True non-handed suitable for RH, LH, RHR, and LHR (Door lock only)
Mechanical Key Override:	Conventional cylinders with 2 keys or prepared small format interchangeable core (not included)
Compatible Interchangeable Cores:	Arrow, Best, Falcon, KSP or Keymark (core not supplied)
Operation Modes:	• Single credential access with PIN • Passage • Lockout

Mechanical Features

Construction:	Heavy-duty self-powered electronic cylindrical lockset with clutch mechanism; built in numeric keypad
Numeric Keypad:	Epoxy coated metal buttons
Handing:	True non-handed suitable for RH, LH, RHR, LHR (Door lock only)
Lever Type:	ADA compliant, outside lever free to rotate in locked mode
Door Preparation:	ASA 161 with minor modifications
Weatherproofing for Exterior Applications:	Requires Pro-Gasket kit (Part number 404073); Pro-Guard weather shield required in freezing rain environment
Dimensions:	Door thickness from 1 3/8" to 2" (35 mm to 51 mm) adjustable without any tools
Housing & Lever Construction:	Solid cast zinc; concealed mounting and assembly screws
Standard Finishes:	Satin Chrome 626 (26D) housings and levers, Black 676 housings with Satin Chrome 626 (26D) levers and accents

Electronic Features

Batteries:	None
Internal Clock:	Real Time
Communication & Programming:	Easy to program at the keypad
Reset Switch:	Recoverable master code

Lock Operations

Access Type:	Variable PIN
Feedback:	Audible & Visual LEDs
Maximum Number Users:	20
User Levels:	Master, Manager, Access, Service, and M-Unit
Tamper Lockout:	Programmable (Manager and Master) wrong try limit from 3 to 9 attempts, with penalty duration from 0 to 90 seconds
Emergency Access:	Mechanical key override
Passage Mode:	Electronic, set by authorized master or manager
Door Relock Time:	Programmable from 2 to 15 seconds (Manager or Master)
Daylight Savings Time:	Toggle forward or back (Manager or Master)

Certification and Testing

Accessibility Standards:	ADA compliant lever handle
Fire Rating:	3-hours UL / ULC
Environmental Operating Conditions:	Operating temperature: -13ºF to 151ºF (-25ºC to 66ºC); Operating humidity: 24 hour exposure at 85% and 86ºF (30ºC), as defined in UL 2058, sec. 23; withstands rain and dust (1 hour exposure as defined in UL 2058, sec. 36 and 37); withstands salt spray (96-hour exposure as defined in UL 437, sec. 12).
Durability:	ANSI/BHMA Grade 1 Certified for Mortise Electronic Locks (A156.13 and A156.25)

Cylindrical

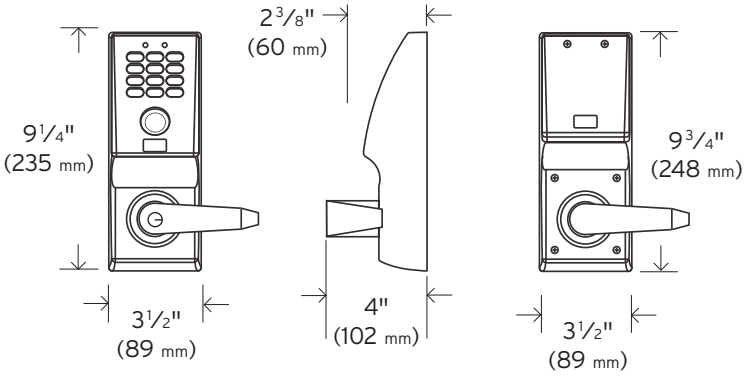

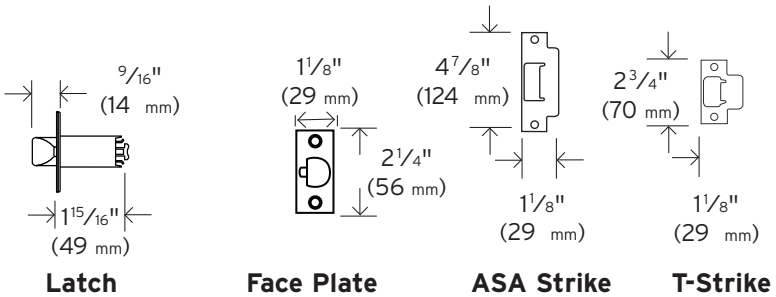

PowerLever®

1550 Series

Example 1 5 5 0 S B L / C R A D

1 5 5 0 — Model

Cylinder

/ — Finish

A — Strike

Keying

Build the model number with the desired options

Base Model	Description	Base Price
1550SBLCRAD	1550, Cylindrical Key-in-Lever, Black Housings with Satin Chrome Levers	$900.00

Choose one option from each category

Model Options	Description	Price
1550	1550 Series, Cylindrical Lock	No Charge

Key Override Options	Description		Price
S	K-I-L	Standard Conventional Cylinder Included (Schlage “C” Keyway)	No Charge
I	I/C	Prepared For Interchangeable Cores (Small Format)	No Charge

Finish Options	Description	Price
BL/CR	Black Body with Chrome Lever	No Charge
CR/CR	Chrome Body with Chrome Lever	Add $65.00

Strike Options	Description	Price
A	ASA Strike	No Charge

Keying Options	Description	Price
D	Keyed Different (Key-in-Lever Models Only)	No Charge
X	N/A (Interchangeable Core Models Only)	No Charge

PowerLever®
4550/4560 Series

- **PIN, SmartKey™ or Dual Credential Access**
- **3,000 Users**
- **23,000 Audit Events**
- **Access Schedules**
- **ANSI/BHMA Grade-1 Certified**

Features

Access Control:	Self-powered electronic lock—eliminates problems and costs associated with issuing, controlling, and collecting keys
Operation & Maintenance:	No batteries means no maintenance
Locking Device Options:	Cylindrical: Cylindrical latch with 3-hour UL/ULC fire rating Exit Rim Device: Compatible with most leading brands of Exit Devices (Exit Device and Mounting Hardware not included
Number of Codes:	Multiple Codes—3,000 users
Programming:	Pushbuttons, SmartKey and software
Handing:	True non-handed suitable for RH, LH, RHR, LHR (Door lock only), and field reversible (Exit Device only)
Mechanical Key Override:	Conventional cylinders with 2 keys or prepared small format interchangeable core (not included)
Compatible Interchangeable Cores:	Arrow, Best, Falcon, KSP or Keymark (core not supplied)
Operation Modes:	• Single credential access with PIN or SmartKey • Dual credential access with PIN and SmartKey • Passage • Lockout
Exit Device Compatibility:	Von Duprin 98/99 and 98-F/99-F (manufactured after 1985) Von Duprin 22/22-F Sargent 8888 Sargent 12-8888 Arrow S3801 Arrow S3803 Arrow F-S3801 Arrow S-3803 Dorma 9300 Dorma F9300 Precision 1103 Precision FL1103 Monarch 18-R Monarch F-18-R **ATTENTION: Compatibility is subject to change if modifications are made by Exit Device manufacturers without Kaba Access Control's knowledge.**

PowerLever®

4550/4560 Series

KABA®

Mechanical Features

Construction:	Heavy-duty self-powered electronic cylindrical lockset with clutch mechanism; built in numeric keypad
Numeric Keypad:	Epoxy coated metal buttons
Handing:	True non-handed suitable for RH, LH, RHR, LHR (Door lock only), and field reversible (Exit Device only)
Lever Type:	ADA compliant, outside lever free to rotate in locked mode
Door Preparation:	ASA 161 with minor modifications
Weatherproofing for Exterior Applications:	Requires Pro-Gasket kit (Part number 404073); Pro-Guard weather shield required in freezing rain environment
Dimensions:	Door thickness from 1 3/8" to 2" (35 mm to 51 mm) adjustable without any tools
Housing & Lever Construction:	Solid cast zinc; concealed mounting and assembly screws
Standard Finishes:	Satin Chrome 626 (26D) housings and levers, Black 676 housings with Satin Chrome 626 (26D) levers and accents

Electronic Features

Batteries:	None
Internal Clock:	Real Time
Communication & Programming:	Pushbuttons, SmartKey, and software
Reset Switch:	Recoverable Master code

Lock Operations

Access Type:	Variable PIN, and/or SmartKey™ or Dual Credential
Feedback:	Audible & Visual LEDs
Management Software:	Windows 98SE and newer
Maximum Number Users:	3,000
Audit Trail (with date & time stamp):	23,000 events
Programmable Schedule:	6 user defined schedules, plus (1) 24-hour access
Holidays:	18
User Levels:	Master, Manager, Access, Service, and M-Unit
Tamper Lockout:	Programmable (Manager and Master) wrong try limit from 3 to 9 attempts, with penalty duration from 0 to 90 seconds
Emergency Access:	Mechanical key override
Passage Mode:	Electronic, set by authorized master or manager
Door Relock Time:	Programmable from 2 to 15 seconds (Manager or Master)
Daylight Savings Time:	Toggle forward or back (Manager or Master)

Certification and Testing

Accessibility Standards:	ADA compliant lever handle
Fire Rating:	3-hours UL/ULC
Environmental Operating Conditions:	Operating temperature: -13ºF to 151ºF (-25ºC to 66ºC); Operating humidity: 24 hour exposure at 85% and 86ºF (30ºC), as defined in UL 2058, sec. 23; with-stands rain and dust (1 hour exposure as defined in UL 2058, sec. 36 and 37); withstands salt spray (96-hour exposure as defined in UL 437, sec. 12).
Durability:	Grade 1 certified; BHMA A156.2/156.25 (door locks); BHMA A156.25/156.3 (exit device operators)

Cylindrical

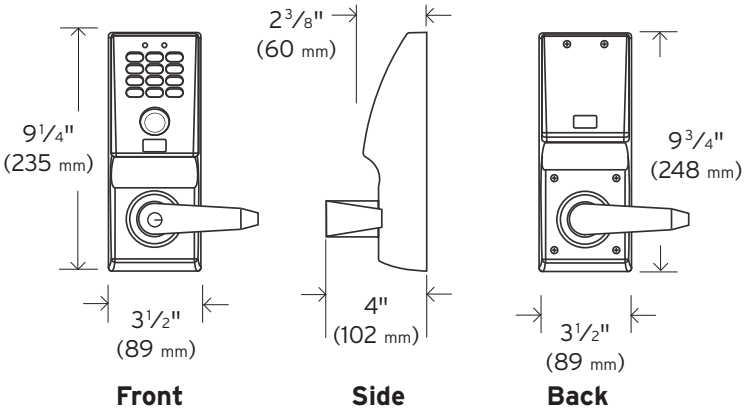

Front **Side** **Back**

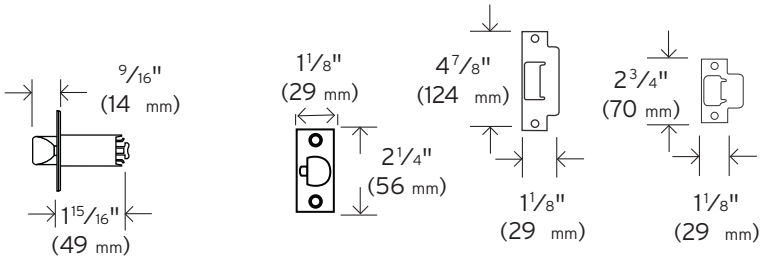

Latch **Face Plate** **ASA Strike** **T-Strike**

Exit Trim

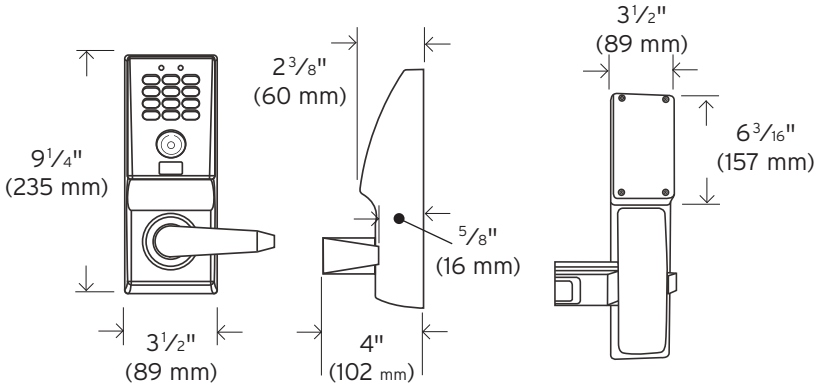

Front **Side** **Back**

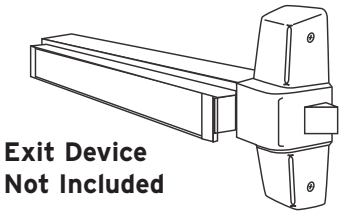

Exit Device Not Included

Rim Exit Device

Required Features

PC Software

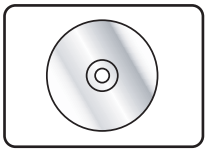

PowerLever®

4550/4560 Series – Cylindrical

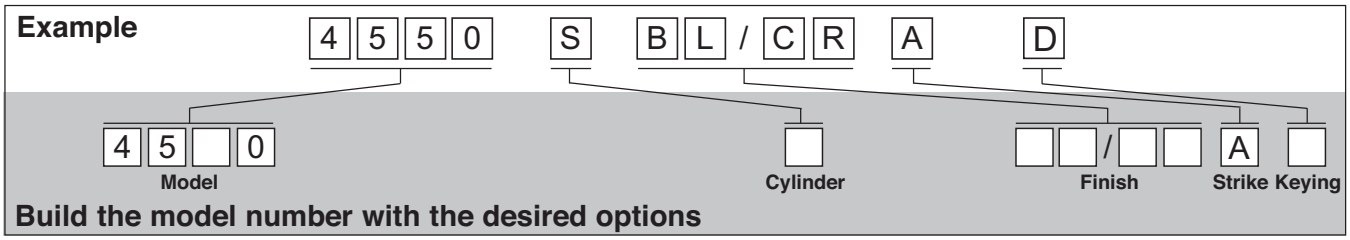

Base Model	Description	Base Price
4550SBLCRAD	4550, Cylindrical, Key-in-Lever. Smart Key Black Housings with Satin Chrome Levers	$1,150.00

Choose one option from each category

Model Options	Description	Price
4550	4550 Series, Cylindrical Lock	No Charge
4560	4560 Series, Cylindrical Lock – Active PIN	No Charge

Key Override Options	Description		Price
S	K-I-L	Standard Conventional Cylinder Included (Schlage “C” Keyway)	No Charge
I	I/C	Prepared For Interchangeable Cores (Small Format)	No Charge

Finish Options	Description	Price
BL/CR	Black Body with Chrome Lever	No Charge
CR/CR	Chrome Body with Chrome Lever	Add $65.00

Strike Options	Description	Price
A	ASA Strike	No Charge

Keying Options	Description	Price
D	Keyed Different / (Key-in-Lever Models Only)	No Charge
X	N/A (Interchangeable Core Models Only)	No Charge

Notes

Software Required—See Page 80

PowerLever®

4550/4560 Series – Exit Trim

Example 4 5 5 A S B L / C R X D

4 5					
Model	Exit Device Type	Cylinder	Finish	Strike	Keying

Build the model number with the desired options

Base Model	Description	Base Price
455ASBLCRXD	455x, Exit, Key-in-Lever, Black with Chrome	$1,220.00

Choose one option from each category

Model Options	Description	Price
455	455x Series, Exit Device Operator	No Charge
456	456x Series, Exit Device Operator—ActivePin	No Charge

Exit Device Options	Description	Price
A	Von Duprin 98/99 and 98-F/99-F Manufactured after 1985	No Charge
B	Von Duprin 22/22-F	No Charge
C	Sargent 8888, 12-8888, Arrow S3801; S3803, F-3801, S-3803	No Charge
D	Dorma 9300, F9300	No Charge
E	Precision 1103, FL1103	No Charge
F	Monarch 18-R, F-18-R	No Charge
G	Yale 7100, Corbin Russwin 5200	No Charge
H	Precision 2100 Series	No Charge

Key Override Options	Description	Price
S	K-I-L Standard Conventional Cylinder Included (Schlage “C” Keyway)	No Charge
I	I/C Prepared For Interchangeable Cores (Small Format)	No Charge

Finish Options	Description	Price
BL/CR	Black Body with Chrome Lever	No Charge
CR/CR	Chrome Body with Chrome Lever	Add $65.00

Strike Options	Description	Price
X	Not Applicable	No Charge

Keying Options	Description	Price
D	Keyed Different / (Key-in-Lever Models Only)	No Charge
X	N/A (Interchangeable Core Models Only)	No Charge

Notes

Software Required—See Page 80

Can not be used with Mortise design or most vertical rod Exit Devices

ATTENTION: Compatibility is subject to change if modifications are made by Exit Device manufacturers without Kaba Access Control's knowledge

PowerLever® PROX

Model 9550 PROX Series

- **PIN, PROX or Dual Credential Access**
- **3,000 Users**
- **30,000 Audit Events**
- **Access Schedules**
- **ANSI/BHMA Grade-1 Certified**

Features

Access Control:	Self-powered electronic lock—eliminates problems and costs associated with issuing, controlling and collecting keys
Operation & Maintenance:	No batteries means no maintenance
Locking Device Option:	Cylindrical: Cylindrical latch with 3-hour UL/ULC fire rating Exit Rim Device: Compatible with most leading brands of Exit Devices (Exit Device and Mounting Hardware not included
Number of Codes:	Multiple Codes – 3,000 users
Programming:	PDA handheld device and software
Handing:	True non-handed suitable for RH, LH, RHR, LHR (Door lock only), and field reversible (Exit Device only)
Mechanical Key Override:	Conventional cylinders with 2 keys or prepared small format interchangeable core (not included)
Compatible Interchangeable Cores:	Arrow, Best, Falcon, KSP or Keymark (core not supplied)
Operation Modes:	• Dual credential access with PIN and PROX • Passage • Lockout
Exit Device Compatibility:	Von Duprin 98/99 and 98-F/99-F (manufactured after 1985) Von Duprin 22/22-F Sargent 8888 Sargent 12-8888 Arrow S3801 Arrow S3803 Arrow F-S3801 Arrow S-3803 Dorma 9300 Dorma F9300 Precision 1103 Precision FL1103 Monarch 18-R Monarch F-18-R **ATTENTION: Compatibility is subject to change if modifications are made by Exit Device manufacturers without Kaba Access Control's knowledge.**

Mechanical Features	
Construction:	Heavy-duty self-powered electronic cylindrical lockset with clutch mechanism; built in numeric keypad
Numeric Keypad:	Epoxy coated metal buttons
Handing:	True non-handed suitable for RH, LH, RHR, LHR (Door lock only), and field reversible (Exit Device only)
Lever Type:	ADA compliant, outside lever free to rotate in locked mode
Door Preparation:	ASA 161 with minor modifications
Weatherproofing for Exterior Applications:	Requires Pro-Gasket kit (Part number 404073); Pro-Guard weather shield required in freezing rain environment
Dimensions:	Door thickness from 1 3/8" to 2" (35 mm to 51 mm) adjustable without any tools
Housing and Lever Construction:	Solid cast zinc; concealed mounting and assembly screws
Standard Finishes:	Satin Chrome 626 (26D) housings and levers, Black 676 housings with Satin Chrome 626 (26D) levers and accents

Electrical Features	
Batteries:	None
Internal Clock:	Real Time
Communication and Programming:	PDA handheld device and software
Reset Switch:	Recoverable Master code

Lock Operation	
Access Type:	Variable PIN, PROX or Dual Credential Access
Feedback:	Audible & Visual LEDs
Management Software:	Windows 98SE and newer
Maximum Number Users:	3,000
Audit Trail (with date & time stamp):	30,000 events
Programmable Schedule:	16 user defined schedules, plus (1) 24-hour access
Holidays:	32
User Levels:	Master, Manager, Access, Service, and M-Unit
Tamper Lockout:	Programmable (Manager and Master) wrong try limit from 4 to 9 attempts, with penalty duration from 0 to 15 seconds
Emergency Access:	Mechanical key override
Passage Mode:	Electronic, set by authorized master or manager
Door Relock Time:	Programmable from 2 to 15 seconds (Manager or Master)
Daylight Savings Time:	Toggle forward or back (Manager or Master)

Certification and Testing	
Accessibility Standards:	ADA compliant lever handle
Fire Rating:	3-hours UL/ULC
Environmental Operating Conditions:	Operating temperature: -13ºF to 151ºF (-25ºC to 66ºC); Operating humidity: 24 hour exposure at 85% and 86ºF (30ºC), as defined in UL 2058, sec. 23; with-stands rain and dust (1 hour exposure as defined in UL 2058, sec. 36 and 37); withstands salt spray (96-hour exposure as defined in UL 437, sec. 12).
Durability:	Grade 1 certified; BHMA A156.2/156.25 (door locks); BHMA A156.25/156.3 (exit device operators)

PowerLever® PROX

Model 9550 Cylindrical

Cylindrical

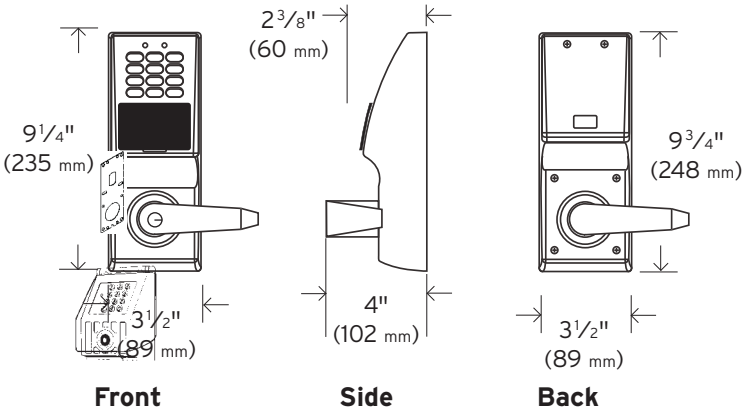

Front **Side** **Back**

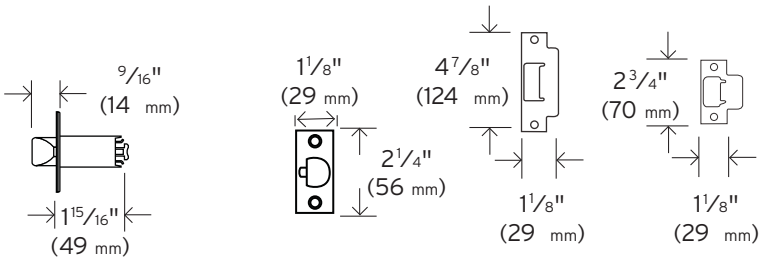

Latch **Face Plate** **ASA Strike** **T-Strike**

Exit Trim

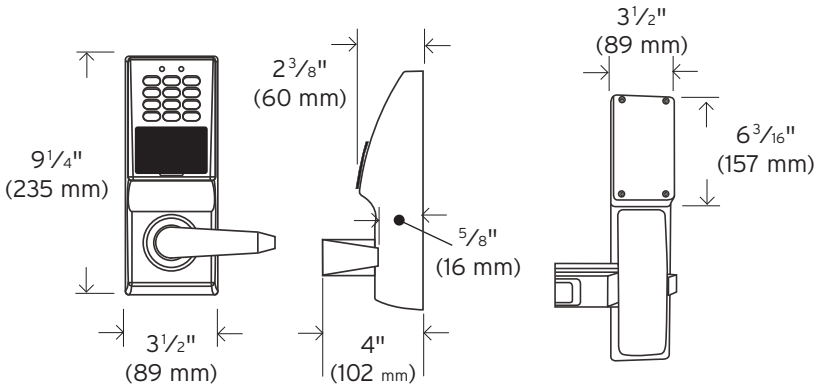

Front **Side** **Back**

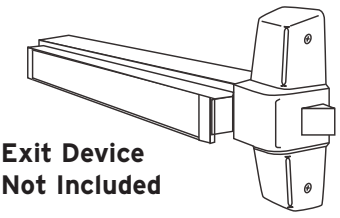

Exit Device Not Included

Rim Exit Device

Required Features

PC Software

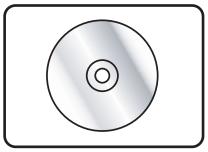

Example 9 5 5 0 S B L / C R A D

9 5 5 0 — Model

S — Cylinder

B L / C R — Finish

A — Strike

D — Keying

Build the model number with the desired options

Base Model	Description	Base Price
9550SBLCRAD	9550, Cylindrical Key-in-Lever, PIN and PROX, Black Housings with Satin Chrome Levers	$1,330.00

Choose one option from each category

Model Options	Description	Price
9550	9550 Series, Cylindrical Lock, Pin and Prox	No Charge

Key Override Options	Description		Price
S	K-I-L	Standard Conventional Cylinder Included (Schlage “C” Keyway)	No Charge
I	I/C	Prepared For Interchangeable Cores (Small Format)	No Charge

Finish Options	Description	Price
BL/CR	Black Body with Chrome Lever	No Charge
CR/CR	Chrome Body with Chrome Lever	Add $65.00

Strike Options	Description	Price
A	ASA Strike	No Charge

Keying Options	Description	Price
D	Keyed Different / (Key-in-Lever Models Only)	No Charge
X	N/A (Interchangeable Core Models Only)	No Charge

Notes

Software Required—See Page 80

PowerLever® PROX

955x Series – Exit Trim

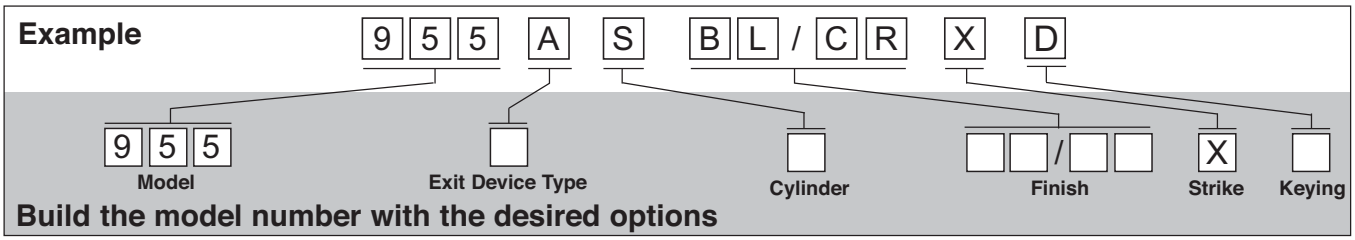

Base Model	Description	Base Price
955ASBLCRXD	955x, Exit, Key-in-Lever, PIN and PROX, Black Housings with Satin Chrome Levers	$1,380.00

Choose one option from each category

Model Options	Description	Price
955	955x Series, Exit Device Operator	No Charge

Exit Device Options	Description	Price
A	Von Duprin 98/99 and 98-F/99-F Manufactured after 1985	No Charge
B	Von Duprin 22/22-F	No Charge
C	Sargent 8888, 12-8888, Arrow S3801; S3803, F-3801, S-3803	No Charge
D	Dorma 9300, F9300	No Charge
E	Precision 1103, FL1103	No Charge
F	Monarch 18-R, F-18-R	No Charge
G	Yale 7100, Corbin Russwin 5200	No Charge
H	Precision 2100 Series	No Charge

Key Override Options	Description		Price
S	K-I-L	Standard Conventional Cylinder Included (Schlage “C” Keyway)	No Charge
I	I/C	Prepared For Interchangeable Cores (Small Format)	No Charge

Finish Options	Description	Price
BL/CR	Black Body with Chrome Lever	No Charge
CR/CR	Chrome Body with Chrome Lever	Add $60.00

Strike Options	Description	Price
X	Not Applicable	No Charge

Keying Options	Description	Price
D	Keyed Different / (Key-in-Lever Models Only)	No Charge
X	N/A (Interchangeable Core Models Only)	No Charge

Notes

Software Required—See Page 80

Can not be used with Mortise design or most vertical rod Exit Devices

ATTENTION: Compatibility is subject to change if modifications are made by Exit Device manufacturers without Kaba Access Control's knowledge

455x/456x Accessories

Item	Model Number	Description	Price
	202021	Red Key (SA) for Date Transfer Lock/Software	$40.00
	212030	Orange Key (User) for User Access at Lock	$40.00
	202024	Black Key (Log On) for Software Access	$40.00
	201118	Key Reader and Serial Adapter Kit	$100.00
	401109	Implementation Kit (455x) • PowerLever Software • Key Reader (201118) • 1 Black Logon Key (202024) • 2 Red SA Key for Data Transfer (202021)	$260.00
	401110	Replacement Software CD (455x) • PowerLever Software • 1 Black Logon Key (202024)	$80.00
	401108	AP Implementation Kit (456x) • PowerLever Software • Key Reader (201118) • 1 Black Logon Key (202024) • 2 Red SA Key for Data Transfer (202021)	$260.00
	402060	AP Replacement Software CD (456x) • PowerLever Software • One Black Logon Key (202024)	$80.00

955x Accessories

Item	Model Number	Description	Price
	404156	PL Prox Implementation Kit (955x)—(Includes 404157)	$600.00
	401114	PL Prox Replacement Software CD (955x)	$80.00
	54561000	USB Prox Reader / Enroller (955x)	$440.00
	065-101066	HID ProxCard II Proximity Access Card #1326M—Not Printable, with slot (Minimum order 100)	$6.50
	065-507143	HID IsoProx II Card (PVC-31 mils) #1386—Printable, no slot (Minimum order 100)	$8.00
	065-507144	HID DuoProx (PVC-31 mils) High C / Proximity #1336—Printable, no slot (Minimum order 100)	$8.50

955x Accessories (continued)

Item	Model Number	Description	Price
	065-511072	MicroProx Tag Proximity #1391 (Adhesive Backed Disc—Minimum order 100)	$5.50
	120-508051	HID Prox Key II (1346)—FOB (Minimum order 100)	$8.50
	P203-10	Retractable Card Holder – (priced per 10-pack)	$40.00
	404157	PL Prox “IrDA” Communication Module Kit—(Included in 404156)	$200.00

Common Lock Accessories

Item	Model Number	Description	Price
	404073	PowerLever Pro-Gasket Kit Required for Outdoor Applications	$36.00
	404143	PowerLever Pro-Guard Weather Shield	$40.00
	405386	PowerLever Series Wood Demo Mount	$100.00

KABA®

Notes

Notes

Enroll Cards Without Software with Kaba's LearnLok™ Feature

With Kaba Access Control's LearnLok™ feature, cards can be enrolled right at the door (lock) by a simple, quick and secure programming sequence, without the use of software or lock programming devices.

CARD FORMATS

E-Plex 3700/5700 Series
- LearnLok™ compatible credentials: HID PROX Cards

E-Plex 3600/5600 Series
- LearnLok™ compatible credentials: iClass™, Mifare® and DESFire® compatible cards

E-Plex 5800 Series
- LearnLok™ compatible credentials: FIPS 201 compatible cards (TWIC™, CAC, PIV, FRAC, PIV-I), DESFire®

OTHER INFORMATION

Features

- Up to 300 users can be independently programmed as Card-only, PIN + Card, or PIN Only
- Easily programming via keypad
- Simple audit software is available separately
- As the need for more features arise including more users, expanded audits, access schedules, etc., these same locks can be upgraded with optional software to accommodate up to 3,000 users/30,000 audit events per door

KABA®

For More Information—please visit our Web site at: www.kabaaccess.com

A Solution for Every Access Point... and Every Budget

E-PLEX®	2000	3000	3200	5000 5070	5200 5270
ACCESS CREDENTIALS					
NUMBER OF ACCESS CODES	 100 CODES	 300 CODES	 3,000 CODES	 100/300* CODES	 3,000 CODES
LOCKING DEVICE OPTIONS	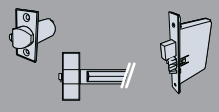	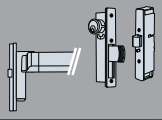	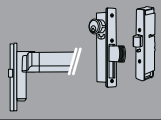	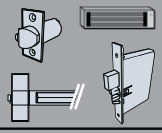	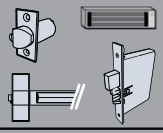
KEY OVERRIDE	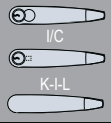 I/C K-I-L	 REPLACEABLE MORTISE CYLINDER	 REPLACEABLE MORTISE CYLINDER	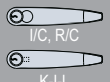 I/C, R/C K-I-L	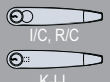 I/C, R/C K-I-L
CERTIFICATIONS	UL CE BHMA CERTIFIED GRADE 1	UL CE	UL CE	UL CE BHMA CERTIFIED GRADE 1	UL CE BHMA CERTIFIED GRADE 1
OPTIONS	 THUMBTURN	 THUMBTURN REMOTE RELEASE	 THUMBTURN REMOTE RELEASE	PRIVACY 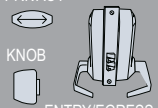 KNOB ENTRY/EGRESS REMOTE RELEASE	PRIVACY KNOB ENTRY/EGRESS REMOTE RELEASE
SOFTWARE PROGRAMMING		 OPTIONAL	 REQUIRED	 OPTIONAL	 REQUIRED
AUDIT CAPABILITIES		 9,000 EVENTS	 30,000 EVENTS	 9,000 EVENTS	 30,000 EVENTS
ACCESS SCHEDULES			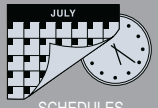 JULY SCHEDULES		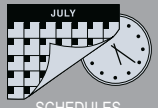 JULY SCHEDULES

E-PLEX® PIN-Based Access Control Products

A Solution for Every Access Point... and Every Budget

E-PLEX®	3600	3700	5600 / 5670	5700 / 5770	5800 / 5870
	Smart Cards	PROX BY HID	Smart Cards	PROX BY HID	GSA FIPS 201 APPROVED
ACCESS CREDENTIALS	Smart Cards	PROX BY HID	Smart Cards	PROX BY HID	
NUMBER OF ACCESS CODES	3,000 CODES/CARDS	3,000 CODES/CARDS	3,000 CODES/CARDS	3,000 CODES/CARDS	3,000 CODES/CARDS
LOCKING DEVICE OPTIONS	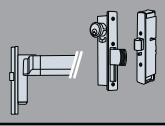	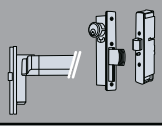	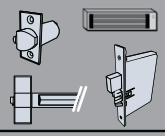	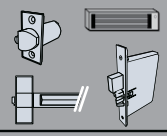	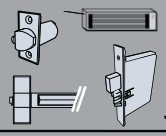
KEY OVERRIDE	REPLACEABLE MORTISE CYLINDER	REPLACEABLE MORTISE CYLINDER	I/C, R/C K-I-L	I/C, R/C K-I-L	I/C, R/C K-I-L
CERTIFICATIONS			BHMA CERTIFIED GRADE 1	BHMA CERTIFIED GRADE 1	BHMA CERTIFIED GRADE 1
OPTIONS	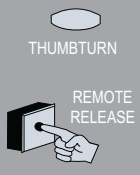 THUMBTURN REMOTE RELEASE	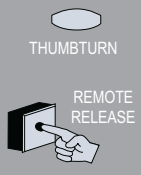 THUMBTURN REMOTE RELEASE	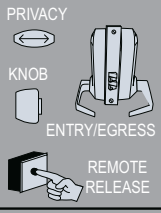 PRIVACY KNOB ENTRY/EGRESS REMOTE RELEASE	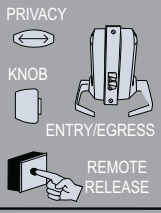 PRIVACY KNOB ENTRY/EGRESS REMOTE RELEASE	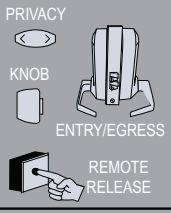 PRIVACY KNOB ENTRY/EGRESS REMOTE RELEASE
SOFTWARE PROGRAMMING	OPTIONAL	OPTIONAL	OPTIONAL	OPTIONAL	OPTIONAL
AUDIT CAPABILITIES	30,000 EVENTS	30,000 EVENTS	30,000 EVENTS	30,000 EVENTS	30,000 EVENTS
ACCESS SCHEDULES	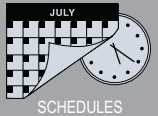 JULY SCHEDULES	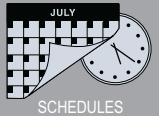 JULY SCHEDULES	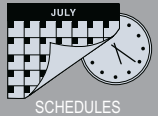 JULY SCHEDULES	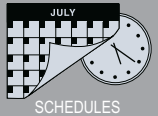 JULY SCHEDULES	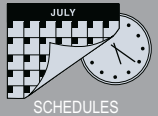 JULY SCHEDULES

E-PLEX® Card-Based Access Control Products

For more detailed information, please go to www.kabaaccess.com

Disclaimer: While reasonable efforts were made to ensure the accuracy of this document at the time of printing, Kaba assumes no liability for any errors or omissions. This information is subject to be revised without notice, and changes may be incorporated in future releases.

KABA®

Kaba Access Control
2941 Indiana Avenue
Winston-Salem, NC 27105 USA
Tel: 800.849.8324
Fax: 800.346.9640

www.kabaaccess.com

KAA1211 1010